SAMMI MACHINERY

THE PERFECT ISOLATION SYSTEM

Upgrade safety of your piping facility

LINE BLIND For Positive Isolation

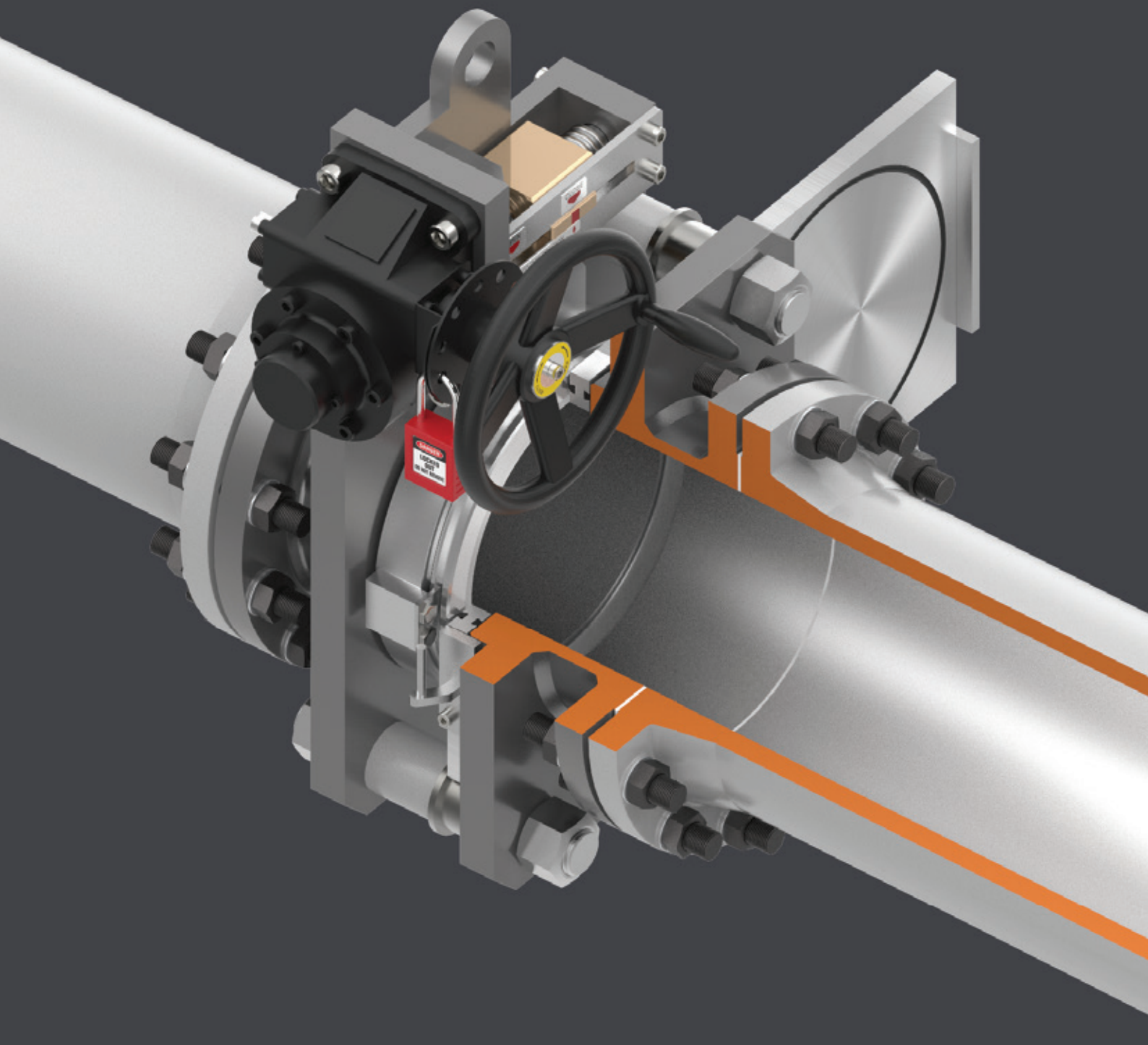

CUSTOMER LIST

North America

- AIR LIQUIDE
- ARKEMA
- BASF GIESMER
- BP TEXAS
- CARPENTER CHEMICAL
- CENOVUS
- CHEVRON BORGER
- CHEVRON MISSISIPI
- CHEVRON PHILLIPS CHEMICAL
- DOW
- DUKE ENERGY
- DUPONT BAYPORT
- DUPONT VIRGINIA
- ENTERGY
- EXXON MOBIL HOUSTON
- FORMOSA PLASTIC
- GE POWER SYSTEMS
- GLENCORE
- GOODYEAR CHEMICAL
- HOLLY FRONTIER
- HONSBY-SEATHERFORD
- ICA INC
- JINFEX
- KAO SPECIALTIES AMERICA
- LAUREN ENGINEERING
- LUBRIZOL PASADENA TX
- MEAD WEST VACO
- MONSANTO LOUISIANA
- NAUGHTON POWER PLANT
- NORANDA ALUMINA
- OCI
- OILTANKING HOUSTON
- PUMA ENGERGY GUATEMALA
- RHODIA
- ROCHE CAROLINA INC
- SHELL
- SINGLE BUOY MOORINGS INC(FPSO)
- SYNGENTA CROP PROTECTION INC
- UOP
- ASHLAND CHEMICAL
- ANDEAVOR
- MARATHON PETROLEUM CORPORATION
- JOHNSON MATTHEY
- US STEEL
- EUREKA MIDSTREAM
- ALBEMARLE
- PPG
- TENARIS TAMSA
- FLINT HILLS RESOURCES
- NOVA CHEMICAL
- INEOS
- KARDEMIR IRON & STEEL

Middle East

- BOROUGE
- ENOC
- FUJAIRAH REFINERY COMPANY LIMITED
- GULF PETROCHEM
- IPC(INTERNATIONAL POLYMERS COMPANY)
- VOPAK HORIZON FUJAIRAH LIMITED
- OMAN OILTANKING TERMINAL
- VTTI
- PORT OF FUJAIRAH
- BPGIC

Europe

- AQUAFIL ENGINEERING
- ARCELOR MITTAL GENT
- AVICO B.V
- BASF
- BLUEWATER ENERGY ENGINEERING
- BP GELSENKIRCHEN
- CEPSA
- COMBRIAN FISHER
- DUPONT
- EXXON MOBILE
- HAMWORTHY CONBUSTION
- LAFARGE ZEMENT KARSDORFER GMBH
- LANXESS
- LINDE ENGINEERING
- NESTE FINLAND
- NUON POWER PLANT
- OILTANKING MALTA
- OILTANKING TERNEUZEN
- PETROCHEM
- PETROLEOS DEL NORTE
- REPSOL
- RHODIA
- S.F.D.M
- SARLIN FURNCES AB
- SINGLE BUOY MOORINGS INC(FPSO)
- SMCA
- SOLVAY
- STATEOIL PERTOLEUM
- TATA STEEL UK
- TATA STEEL VELZEN
- THYSSENKRUPP STEEL EUROPE AG
- TOTAL
- VALERO PEMBROKE REFINERY UK
- VOST ALPINE AUSTRIA
- YARA UUSIKAUPUNKI FINLAND
- BRITIHSH STEEL
- ANDRITZ
- ARLANXEO
- HUNTSMAN
- POLIMERI EUROPA
- KRONOS
- SASOL
- HTO
- COVESTRO
- LUKOIL
- METAFRAX
- ROSNEFT
- SIBUR
- CHEMOURS
- SHELL
- YARA
- HOPE CEMENT
- MACFARLAN SMITH
- REPSOL-SINOPEC RESOURCES

South America

- ELECNOR
- ICA FLUOR
- MC DERMOTT
- OCCIDEDNTAL DE COLOMBIA LLC
- PEMEX
- PETROBRAS
- QUIP

Republic of Korea

- AKYUNG PAINTING
- AKYEONG PETROCHEMICAL
- DAELIM INDUSTRIAL
- DAELIM PETRO
- DONGYANG CHEMICAL
- GS CALTEX
- GS CONSTRUCTION
- HANHWA PETRO
- HONAM PETRO
- HYUNDAI E AND C
- HYUNDAI ENGINEERING
- HYUNDAI STEEL
- ISOO CHEMICAL
- KOLONG CHEMICAL
- KUMHO P&B
- LG CHEMICAL
- LG DOW POLYCARBONATE
- LOTTE CHEMICAL HOIL PLANT
- LUBRIZOL
- POSCO
- SAMNAM PETRO
- SAMSUNG C AND T
- SAMSUNG ENGINEERING
- SAMSUNG EVERLAND
- SAMSUNG GENERAL CHEMICALS
- SAMSUNG SEMI CONDUCTOR
- SAMSUNG TOTAL
- SAMSUNG HEAVY INDUSTRY
- SEETEC
- SK CHEMICAL
- SK CORP
- SK ENERGY
- S-OIL
- STX SHIPBUILDING
- TOYO ENGINEERING
- YNCC

Asia

- ARKEMA
- AUDEX PTE LTD
- BASF ELECTRONIC MATERIALS TAIWAN LIMITED
- BLUESCOPE STEEL
- CHANG CHUN PETROCHEMICAL
- CHINESE PETROLEUM CORPORATION
- CHUNG HUNG STEEL CO
- FERTITIZER KEDAH
- FINOLEX
- FORMOSA CHEMICAL AND FIBER CORPORATION
- FORMOSA PETROCHEMICAL CORPORATION
- FORMOSA PLASTICS
- GLAXO WELLCOME MFG
- HORIZON SINGAPORE TERMINAL
- HQCEC
- INDIA OIL COMPANY LIMITED(IOCL)
- JTC CORPORATION
- MITSUI ENGINEERING AND SHIPBUILDING
- MITSUBISHI HEAVY INDUSTRY
- NESTE OIL SINGAPORE
- OILTANKING SINGAPORE
- PETRONAS CHEMICAL
- PT ASAHIMAS CHEMICAL
- PTT SONGKLA SITE
- POLYPLEX
- ROHM AND HAAS INDIA(DOW INDIA)
- SHENHUA NINGXIA COAL INDUSTRY GROUP
- TECHNIP
- OILTANKING INDONESIA
- CPDC
- BASF
- DCC
- LOTTE CHEMICAL TITAN
- ZHONGTAI CHEMICAL

Africa

- SEREPT
- ARCELOR MITTAL
- STEVAL ENGINEERING
- TEKFEN
- TOTAL GABON
- AMBATOVY
- CAMEL OIL
- OILCOM
- ORYX
- GBP
- TIPER
- ENGEN
- HASS PETROLEUM
- CPMZ

Australia

- BARRICK KANOWNA
- BLUESCOPE STEEL
- ERRARING POWER STATION
- INDEPENDENT CEMENT
- KOPPERS
- MELBOURNE CEMENT
- MINARA RESOURCES
- ORICA
- QUEENSLAND NIKEL
- SANTOS
- V&I AUSTRALIA
- BHP
- CSBP
- HATCH
- CHEVRON
- SUNSTATE CEMENT
- BAYSWATER POWER STATION
- SOUTH 32 ILLAWARRA COAL

ABOUT SAMMI LINE BLIND

Sammi Machinery Co., Ltd. a LINE BLIND fabricator and machine shop, is a wholly owned subsidiary of line blocking technology and products.

Company Profile

- **Apr. 1993** Established
- **Sep. 2000** Quality Certification from KOREA Gas Safety Authority
- **Oct. 2002** Licensed new product of the Line Blind Valve
- **Nov. 2002** Licensed Utility Model of the Line Blind Valve
- **Aug. 2003** CE-PED approved from Bureau Veritas
- **Mar. 2005** Certificated "Venture Company" from KOREA government
- **May. 2007** ISO 9001 Approved
- **Aug. 2009** Fire Safety Test approved
- **Sep. 2009** CRN(Canada Registration Number) approved
- **Feb. 2010** API Spec. Q1 Certificate, ISO / TS 29001 approved
- **Dec. 2012** TSSA (Technical Standards & Safety Authority, Ontario) approved
- **Feb. 2013** RUSSIA GOST-R approved
- **May. 2013** RUSSIA ROSTECHNADZOR (RTN) approved
- **Jun. 2013** Canada ABSA (Pressure Equipment Safety Authority, Alberta) approved
- **July. 2013** API 6D approved
- **Aug. 2013** UAE TAKEER Qualified vendor approved
- **Dec. 2013** KSA SABIC Qualified Vendor approved
- **Apr. 2014** BRAZIL PETROBRAS Offshore Qualified Vendor approved
- **Jun. 2014** UAE Mott Mcdonald Limited Qualified Vendor approved
- **Oct. 2015** TR-CU 032 / 2013 approved
- **Oct. 2016** Cryogenic Test approved

Warranty

Sammi Machinery Co.,Ltd warrants 36 months after delivery provide that the product is installed properly according to vendor's user instruction, except for spare parts.

Assistance

Sammi Machinery Co.,Ltd may provide engineering and/or technical information to assist buyer in effecting field installation and/or field service.
And every request for adjustments and/or modifications will be responded with best regards.

WHAT IS LINE BLIND?

[Typical Process]

[SAMMI Process]

SAMMI LINE BLIND

Line blinding has been used to pipe lines in various industries wherever either positive shut-off is most concerned and full flow should be achieved without pressure drop.

In the past, Blinding (or blanking) a line was a costly labor-intensive process involving several personnel and equipment including cranes (depending on the size of the line) heavy tools, and occasionally scaffolding.

The lengthy process exposed operators to hazards including inhalation of potentially toxic fumes, spills of product and risk of explosion.

In addition to the handling of the heavy and unwieldy blind/spectacle blind flanges.
The **SAMMI LINE BLIND** incorporates a tough and simple design that has been developed to provide absolute shut-off, long life and trouble-free service with minimum maintenance.

The unique and simple opening-closing mechanism of the **SAMMI LINE BLIND** allow one person to blank or blind pipelines with ease, rapidity and safety without any tools or equipment.

- **Absolute shutoff**
  Zero leakage to downstream
- **Quick change**
  Blinding by untrained operator within 30 seconds ~ 5 minutes safely
- **Only one operator**
  Blinding by one operator pipeline with ease and safety
- **Friction-Free**
  Gear-set system provides perfect isolation without any contacting or rubbing of gasket
- **Non line spread**
  No pipe stress during operation
- **Self sticking free mechanism**
  Unique Gear-set system prevents sticking problem of blind plate
- **Cost saving**
  Not only Saving man-hour cost but also increasing production time
- **No need tools**
  Hand-wheel operation.
  No need any tools - Cranes, Bolts, Nuts, Gaskets etc.
- **Safety working**
  Prevention of potential hazard
  - Inhalation of potentially toxic fumes, spills of product and risk of explosion
- **Simple structure**
  Minimum maintenance to replace sealing only

COST EFFECTIVENESS

Necessary time for blinding or deblinding

Size Ranged	Blank or Spectacle Plate(typical)	Sammi Line Blind	Saving Effect
1/2″~ 14″ (DN15~DN350)	 2~4 man gasket, tools, lifter	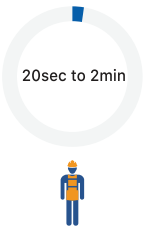 by 1 man	- 2~16 man-hours - Gasket, bolts & nuts,tools - Time for draining and line cooling
16″~ 48″ (DN400~DN1200)	 5-10 man with gasket, tools, lifter & Heavy equipment	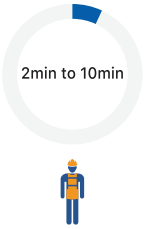 by 1 man	- 16~120 man-hours - Gasket, bolts & nuts,tools - Time for draining and line cooling

Increase productivity

Size	Blinding (typical)	Deblinding (typical)	More production
1/2″ ~ 14″	1 to 4 hours	1 to 4 hours	2 to 8 hours
16″ ~ 48″	4 to 12 hours	4 to 12 hours	8 to 24 hours

- Time saving for and draining and line cooling are not included
- Less pre-purge time
- Immediate work after stopping line

Saving cost for maintenance

- No consumable parts except gaskets
- No tools, wedges, crane, bolts are necessary
- Quick and Positive action in emergency
- Prevent vacuum losing
- Prevent contamination by mixing
- Prevent leaking accident in service
- Prevent environmental pollution

WHY CHOOSE SAMMI

Sammi Quick Line Blinds Offer a combination of two essential criteria

- Zero Leakage
- Safe & Easy blinding by untrained one operator

Features of SAMMI LINE BLIND

- **No line spread**
  The unique & simple Gear-set mechanism makes a gap to switch blind plate without line spreading
- **Auto positioning of blind plate**
  Blind plate is set on correct position by positioner
- **Hand wheel torque indicator**
  Torque indicator provides correct positioning of tightening / untightening operation
- **Safety locking**
  Locking devices with Pad Lock with key secure safety from incorrect operation by unauthorized operator
- **Self stick free mechanism**
  Unique gear set mechanism shall free the blind plate from sticking problem
- **Gasket protection cover**
  Blind cover protects blind plate from external damages
- **Double Sealing (optional)**
  Depend on media and operating conditions, seal ring can be placed in double for safety
- **Open / Close position sensor (optional)**
  Sensors can be installed to indicate blind plate position

APPLICATIONS / MEDIA

- Tankfarm
- FPSO
- Loading stations
- Ethylene furnaces
- COG (Coke Oven Gas) / BFG (Blast Furnace Gas)
- Mixing lines
- Fuel lines
- Shipboard lines
- Flares
- Clean out ports
- Tank vent
- Man ways
- Pump isolation
- LNG ships
- Product isolation
- Reactor blow down
- Filtration systems
- FSO
- Pig launching stations
- Steam lines
- Inert gas / Nitrogen gas
- Chemical cleaning isolation
- Lock out tag out systems
- Clean out ports
- Vessel inlets
- FCC unit

Naphtha, Diesel, Para-Xylene

Coke Oven Gas (AOV automation)

Natural Gas

Product carrier tank isolation

JET - Fuel (MOV automation)

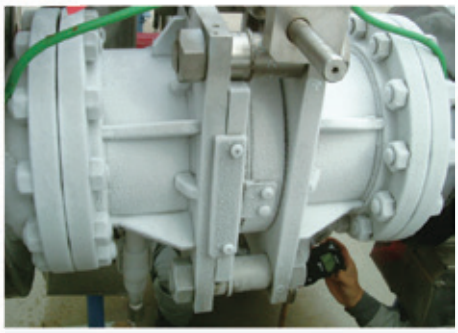

Cryogenic service (LNG / Ethylene)

Tankfarm

Loading arm construction

Iron & Steel mill

VCM, RPG, Mix-Xylene

Chemical Terminal

Acetic acid, Methyl acetate

Ethylene, Propylene, SM

Regeneration gas

Gasoline and MTBE

Chemical Cleaning

Butadine

Heat exchanger - Bypass line

HDPE

On board vessel

PRODUCT LINE

SLIDING TYPE

One operator turns handwheel and unique gear-set mechanism makes a gap without pipe spreading.
By sliding blind plate manually, OPEN / CLOSE blind position is changed.
All blinding process completes within 3 minutes safely and easily.
Sturdy and simple design shall make high reliability with the most advanced technology and durability.

SWING TYPE

It take within 3 minutes for one operator to blank a line, operating the handwheel and rotating the blind into place without line spreading.
Again, all inline movement is internal, eliminating the potential for pipe-joint stress.
As one of the most popular model, quick operation with no line spread and correct spectacle positioner shall make easy and safe pipe line isolation.

COMPACT TYPE

The Compact type is designed for replacement of existing valves, limited F-F dimension or large diameter pipeline applications or limited space for installation.
It is designed with a short face to face, and has tapped bolt holes for easy installation between flanges.
The compact design also reduces weight and requirement for extra pipe support.

NON SPILL TYPE

The body is completely enclosed to prevent spills and reduce emissions during operation.
The compact design incorporates tapped bolt holes for ease of installation.
Process involves operating the handwheel to free the blind, which is then removed and replaced in the blanking position.
The blind is then secured by once more operating the handwheel.

JACK BOLT

The traditional style of line blind offers a broad range of pressures and a lower cost.
The basic standard for line blinding for many years.

GOGGLE TYPE

Goggle type of Line Blind is positive solution for large diameter, high temperature and toxic gas condition for maintenance and inspection

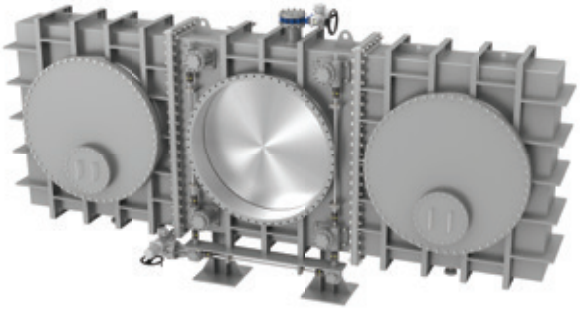

AUTOMATED LINE BLIND

Automated Line Blinds are used for remote control operation, freguence cycle, or critical fluid application.
Sammi provides automated system by AOV, MOV or oil hydraulic source.

SLURRY / POLYMER

Sammi Slurry / Polymer type offers 100% isolation for severe service applications with various types of chemicals that is very thick and viscous fluids and solid.
Dual Gear-set actuators allows no friction during operation and soft seal (Elastomer o-ring) guarantees perfect isolation.
Specially designed scraper system removes fluids built on blind plate.

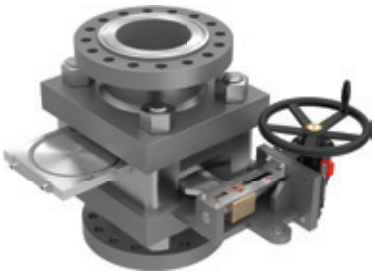

RFCC

Sammi supplies high quality "Perfect isolation RFCC Type " design with compact enclosed body and stellite metal seating.
Gear-set system provides making a gap and single blind plate slides along guide plates that prevents deposition of coke/solid particles on blind disc and jamming.

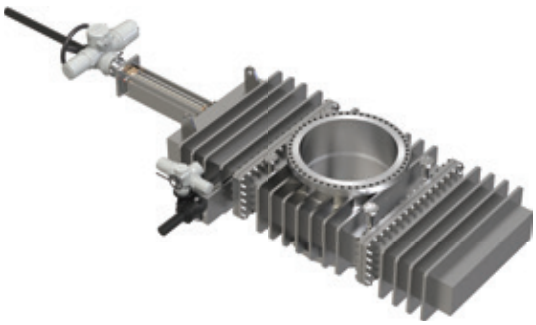

SLIDING TYPE

COMPACT TYPE

NON-SPILL TYPE

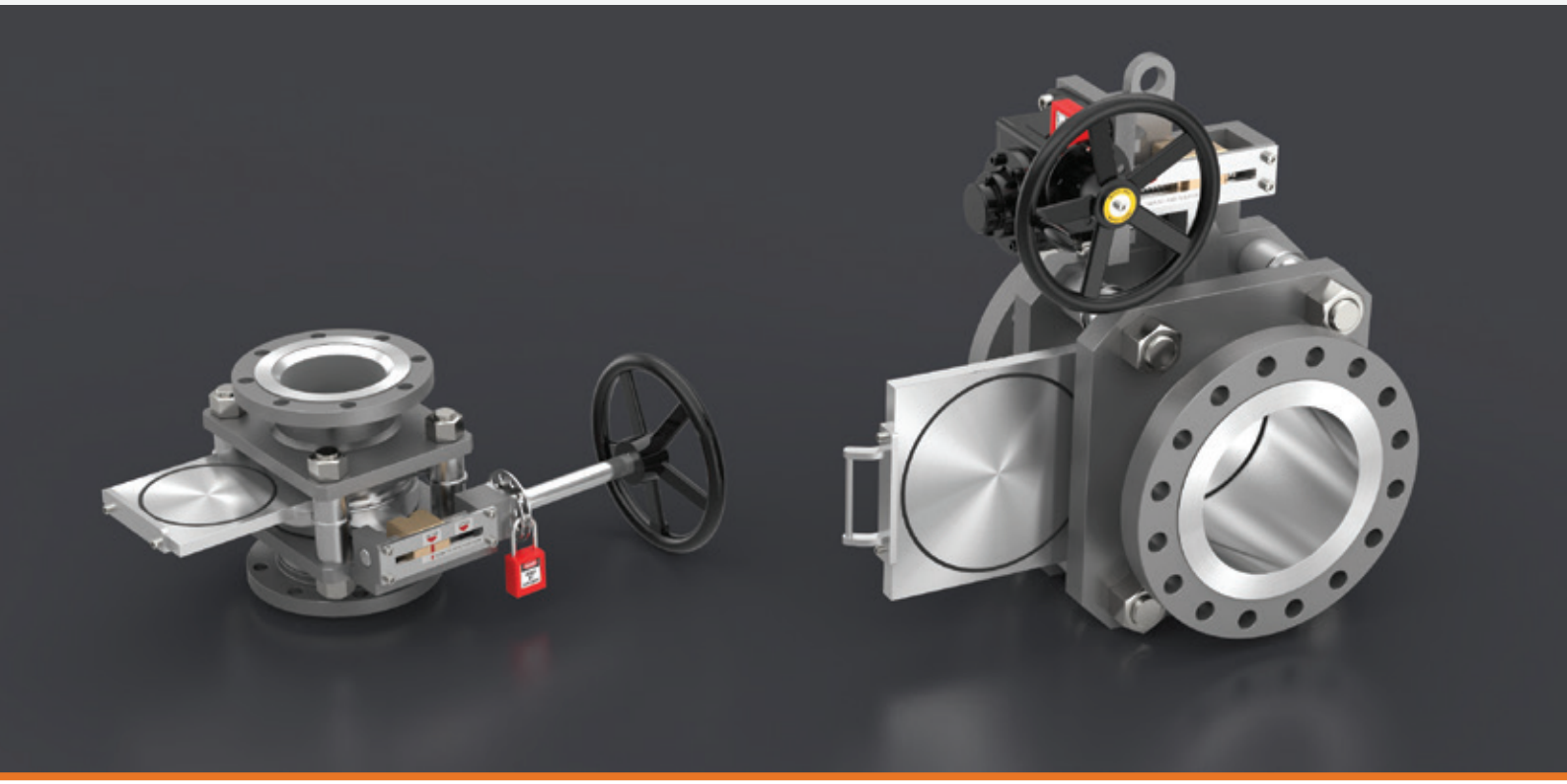

SLIDING TYPE

GENERAL INFORMATION

INSTRUCTION & FEATURES

One operator turns handwheel and unique gear-set mechanism makes a gap without pipe spreading.
By Sliding Blind plate manually, Open/Close Blind position is changed.
All blinding process completes within 3 minutes safely and easily.
Sturdy and simple design shall make high reliability with the most advanced technology and durability.

TECHNICAL SPECIFICATIONS

NOMINAL DIAMETER

NPS 1/2 (DN15) - NPS100 (DN2500)

TEMPERATURE RANGE

Standard Design : -20℃ ~ +200℃
High Temp. Design : +200℃ ~ +816℃
Cryogenic Design : -196℃

PRESSURE RATING

ASME Class 150 to Class 1500
Other pressure classes up to ASME 2500
available upon request

MATERIALS

BODY : Carbon Steel, Stainless Steel, Special Material (Duplex, Hastelloy, Monel, Inconel etc.)
BLIND : Stainless Steel, Special Material (Duplex, Hastelloy, Monel, Inconel etc.)
MOVING PARTS & SEALING SURFACE are Anti-corrosion Materials

FUNCTION

Gas & Liquid Perfect Isolation(Zero Leakage)

OPERATION METHOD

Manual Operation
Electric, Pneumatic or Hydraulic Operation

APPLICATIONS

- **REFINERY**
  - > Ethylene Furnace
  - > Decoking line
  - > Steam & Vapor line
  - > FCCU Fractionator isolation (overhead & bottom line)
  - > Catalyst service
  - > Flare gas line
- **CHEMICAL PLANT**
  - > Reactor Blowdown
  - > Chemical Cleaning isolation
  - > Mixing lines
  - > Regeneration gas line
  - > Filtration system
  - > Loading station
  - > Transfer line
- **OFFSHORE**
  - > FPSO
  - > LNG ship
  - > Shipboard lines
  - > Vessel inlet
  - > Inert Gas system
- **STEEL**
  - > Coke Oven Gas
  - > Blast Furnace Gas

PARTS DESCRIPTION

Sliding Type

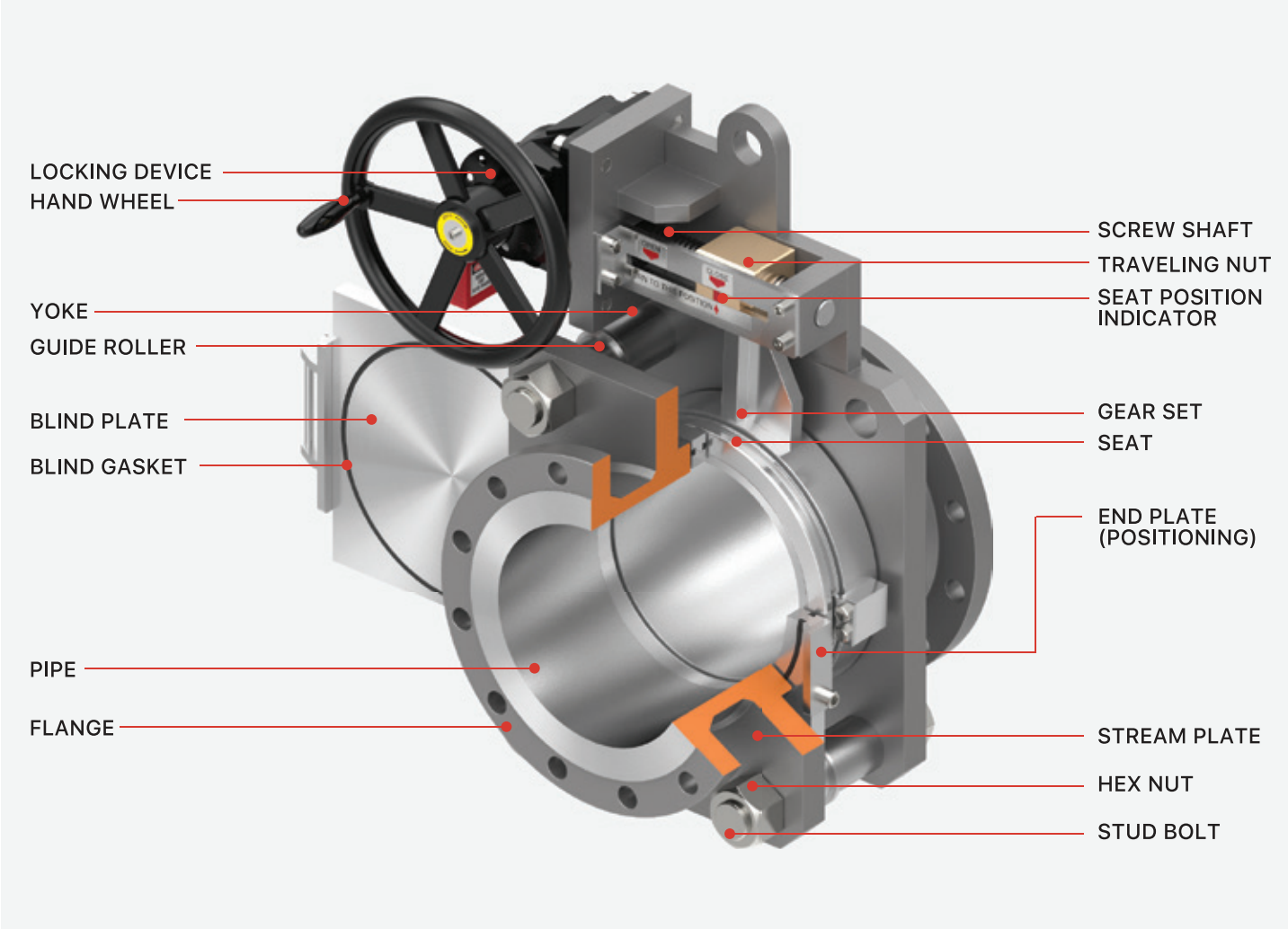

SWING TYPE

GENERAL INFORMATION

INSTRUCTION & FEATURES

It take within 3 minutes for one operator to blank a line, operating the handwheel and rotating the blind into place, without line spreading.
Again, all inline movement is internal, eliminating the potential for pipe-joint stress.
As one of the most popular model, quick operation with no line spread and correct spectacle positioner shall make easy and safe pipe line isolation.

TECHNICAL SPECIFICATIONS

NOMINAL DIAMETER

NPS 1/2 (DN15) - NPS100 (DN2500)

Standard Design : -20℃ ~ +200℃
High Temp. Design : +200℃ ~ +816℃
Cryogenic Design : -196℃

PRESSURE RATING

ASME Class 150 to Class 1500
Other pressure classes up to ASME 2500
available upon request

MATERIALS

BODY : Carbon Steel, Stainless Steel, Special Material (Duplex, Hastelloy, Monel, Inconel etc.)
BLIND : Stainless Steel, Special Material (Duplex, Hastelloy, Monel, Inconel etc.)
MOVING PARTS & SEALING SURFACE are Anti-corrosion Materials

FUNCTION

Gas & Liquid Perfect Isolation(Zero Leakage)

OPERATION METHOD

Manual Operation
Electric, Pneumatic or Hydraulic Operation

APPLICATIONS

- **REFINERY**
  - > Ethylene Furnace
  - > Decoking line
  - > Steam & Vapor line
  - > Flare gas line
- **CHEMICAL PLANT**
  - > Reactor Blowdown
  - > Chemical Cleaning isolation
  - > Mixing lines
  - > Regeneration gas line
  - > Filtration system
- **OFFSHORE**
  - > FPSO
  - > LNG ships
  - > Shipboard lines
  - > Vessel inlet
  - > Inert Gas system
- **STEEL**
  - > Coke Oven Gas
  - > Blast Furnace Gas

PARTS DESCRIPTION

Swing Type

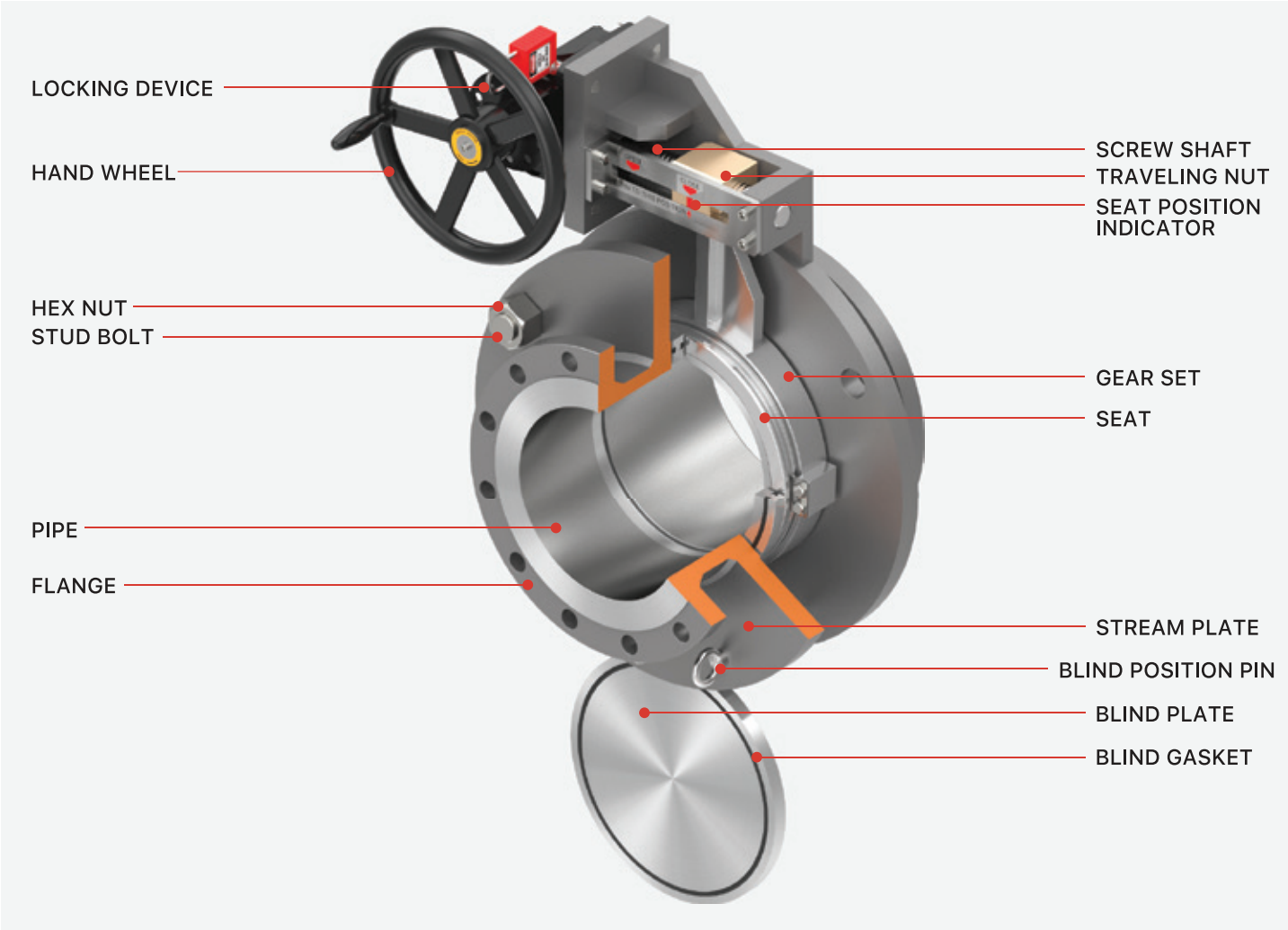

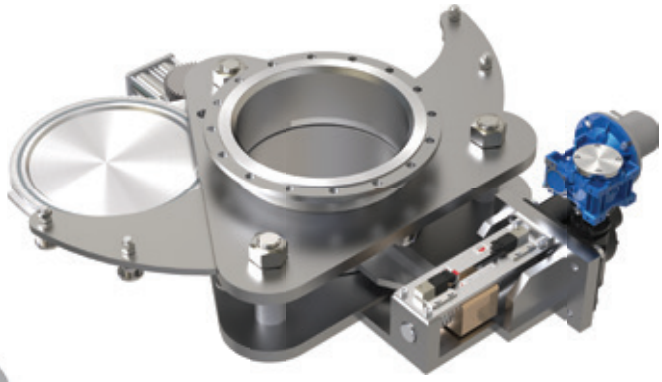

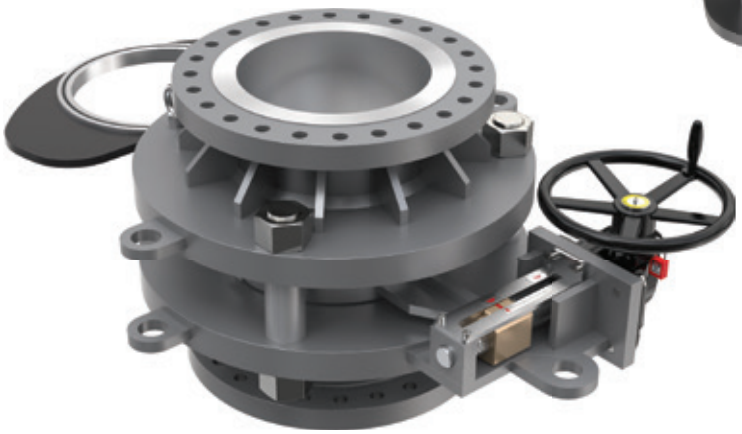

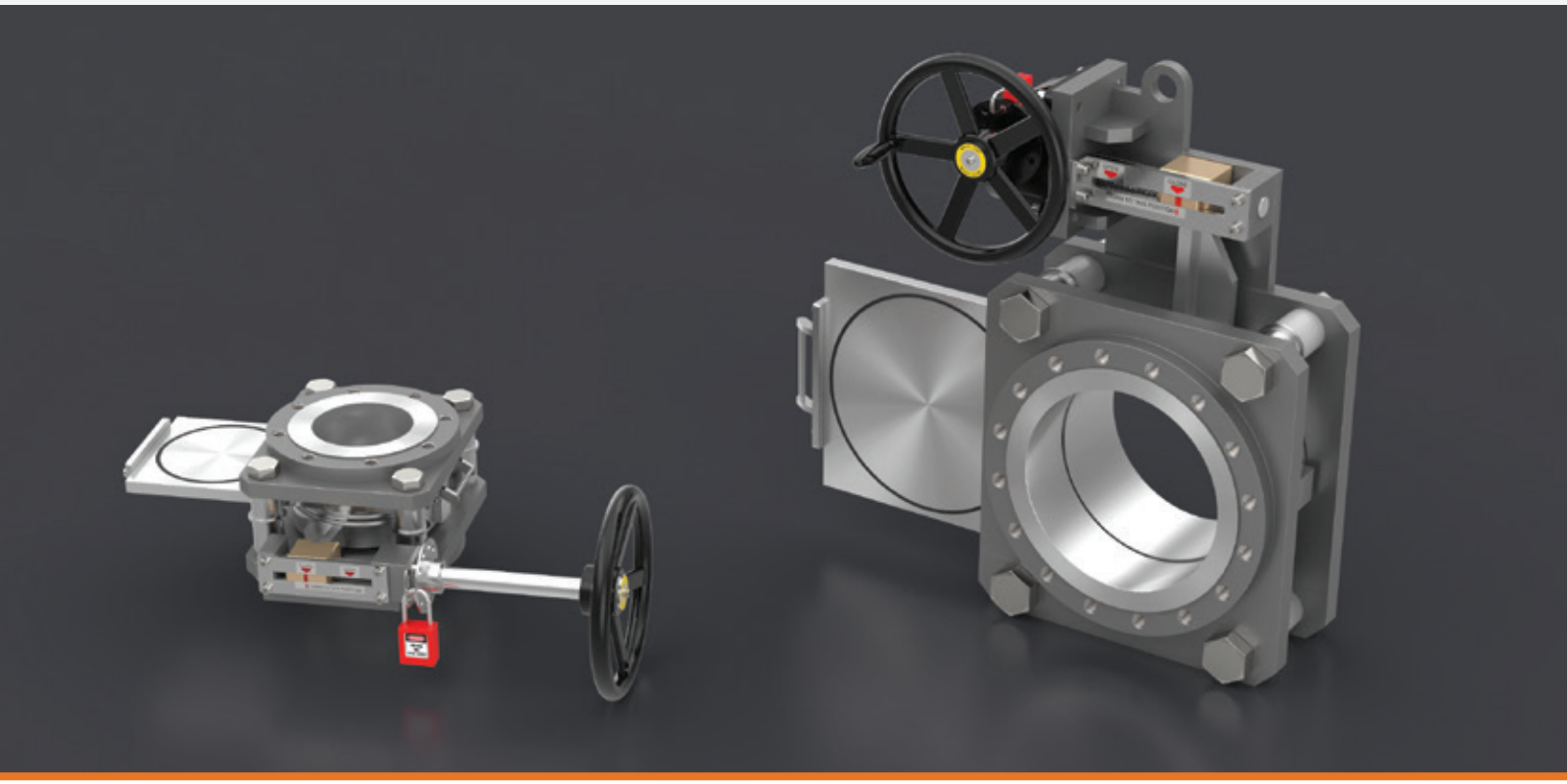

COMPACT TYPE

GENERAL INFORMATION

INSTRUCTION & FEATURES

The Compact type is designed for replacement of existing valves, limited F-F dimension or large diameter pipeline applications or limited space for installation.
It is designed with a short face to face, and has tapped bolt holes for easy installation between flanges.
The compact design also reduces weight and requirement for extra pipe support.

TECHNICAL SPECIFICATIONS

NOMINAL DIAMETER

NPS 1/2 (DN15) - NPS100 (DN2500)

TEMPERATURE RANGE

Standard Design : -20℃ ~ +200℃
High Temp. Design : +200℃ ~ +816℃
Cryogenic Design : -196℃

PRESSURE RATING

ASME Class 150 to Class 1500
Other pressure classes up to ASME 2500
available upon request

MATERIALS

BODY : Carbon Steel, Stainless Steel, Special Material (Duplex, Hastelloy, Monel, Inconel etc.)
BLIND : Stainless Steel, Special Material (Duplex, Hastelloy, Monel, Inconel etc.)
MOVING PARTS & SEALING SURFACE are Anti-corrosion Materials

FUNCTION

Gas & Liquid Perfect Isolation(Zero Leakage)

OPERATION METHOD

Manual Operation
Electric, Pneumatic or Hydraulic Operation

APPLICATIONS

• REFINERY
> Ethylene Furnace
> Decoking line
> Steam & Vapor line
> FCCU Fractionator isolation (overhead & bottom line)
> Catalyst service
> Flare gas line

• CHEMICAL PLANT
> Reactor Blowdown
> Ethylene Furnace
> Chemical Cleaning isolation
> Mixing lines
> Regeneration gas line
> Filtration system
> Loading station
> Transfer line

• OIL TERMINAL
> Oil & Chemical tankfarm
> Loading Station
> Pump isolation
> LNG tank
> Airport fuel line

• OFFSHORE
> FPSO
> LNG ship
> Shipboard lines
> Vessel inlet
> Inert Gas system

• STEEL
> Coke Oven Gas
> Blast Furnace Gas

PARTS DESCRIPTION

Compact Type

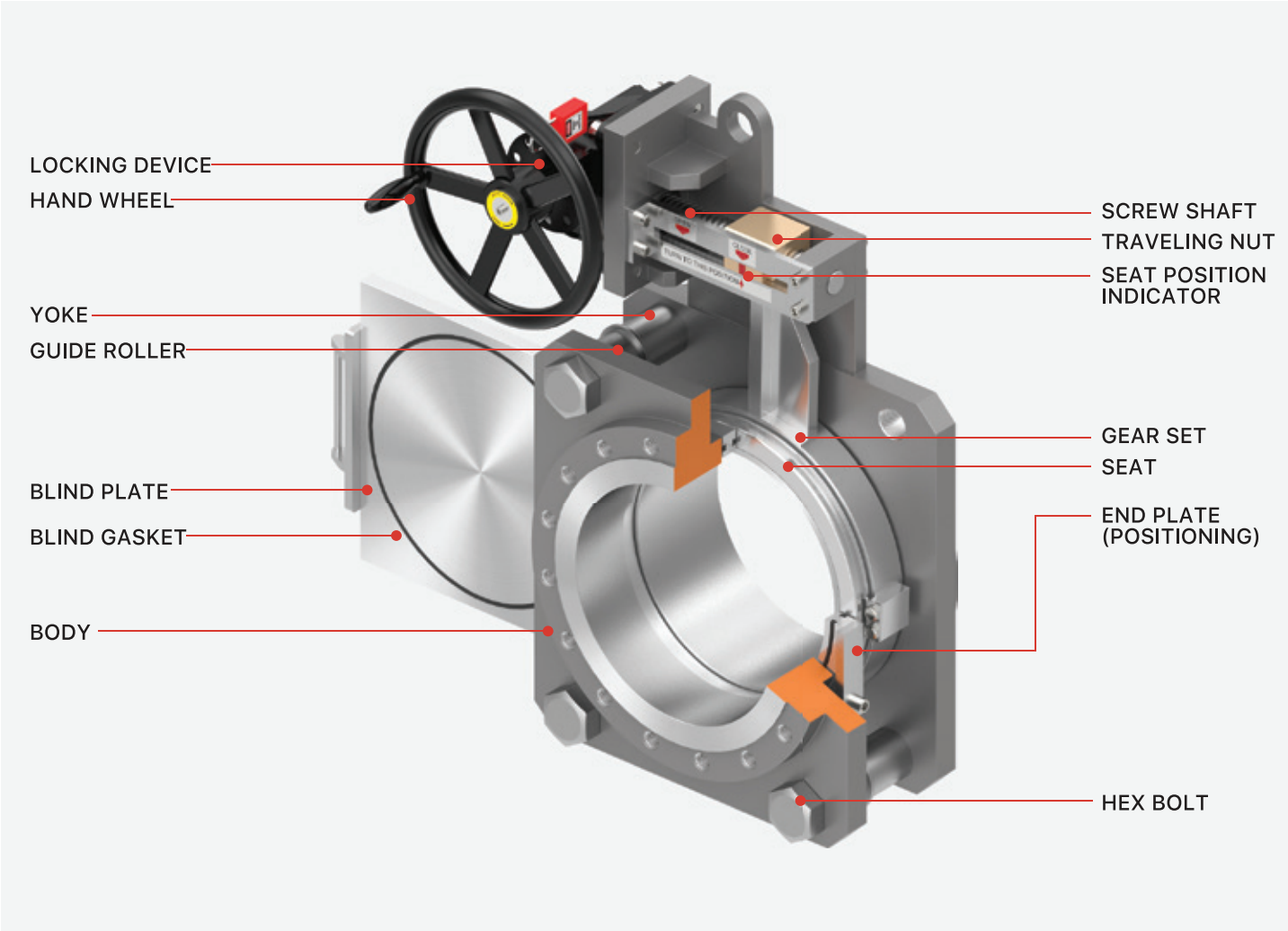

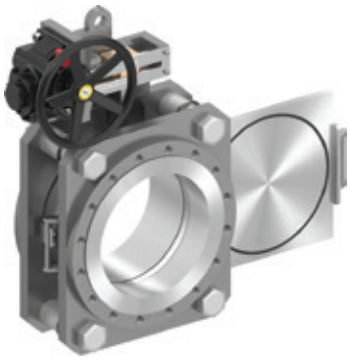

Type A

Type B

Type C

Type D

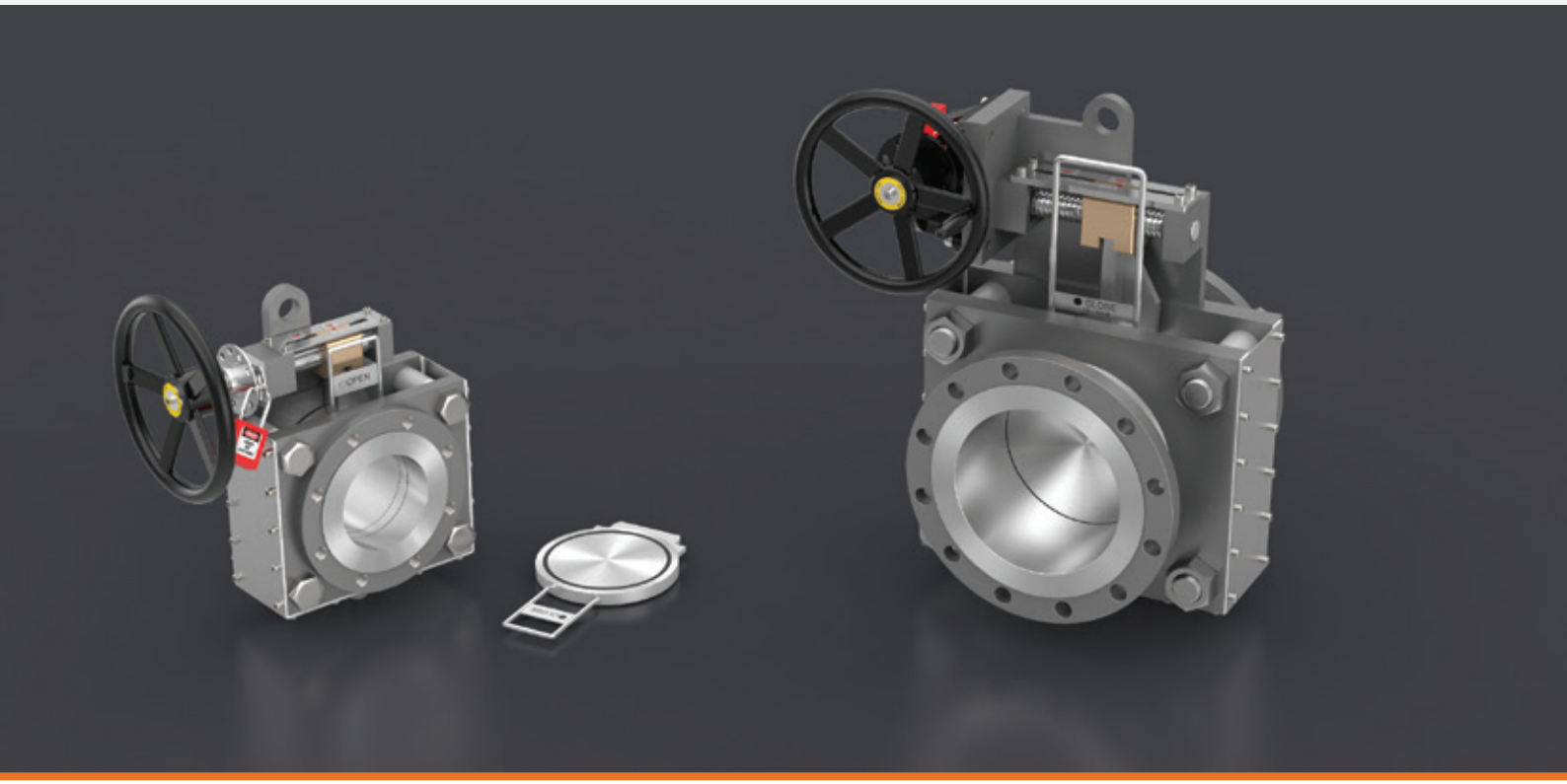

NON SPILL TYPE

GENERAL INFORMATION

INSTRUCTION & FEATURES

Non spill type of Line Blind has good advantages in Oil terminal & offshore applications where is limited installation space and marine pollution is strictly prohibited.
The 3 sides covered body & compact design prevents ground pollution and it allows to install at parallel pipe lines.

TECHNICAL SPECIFICATIONS

NOMINAL DIAMETER

NPS 1/2 (DN15) - NPS100 (DN2500)

TEMPERATURE RANGE

Standard Design : -20℃ ~ +200℃
High Temp. Design : +200℃ ~ +816℃
Cryogenic Design : -196℃

PRESSURE RATING

ASME Class 150 to Class 1500
Other pressure classes up to ASME 2500
available upon request

MATERIALS

BODY : Carbon Steel, Stainless Steel, Special Material (Duplex, Hastelloy, Monel, Inconel etc.)
BLIND : Stainless Steel, Special Material (Duplex, Hastelloy, Monel, Inconel etc.)
MOVING PARTS & SEALING SURFACE are Anti-corrosion Materials

FUNCTION

Gas & Liquid Perfect Isolation(Zero Leakage)

OPERATION METHOD

Manual Operation
Electric, Pneumatic or Hydraulic Operation

APPLICATIONS

• OIL TERMINAL

> Oil & Chemical tankfarm
> Loading Station
> Pump isolation
> LNG tank
> Airport fuel line

• OFFSHORE

> FPSO
> LNG transfer
> Shipboard lines
> Vessel inlet
> Inert Gas system

PARTS DESCRIPTION

Non-spill Type

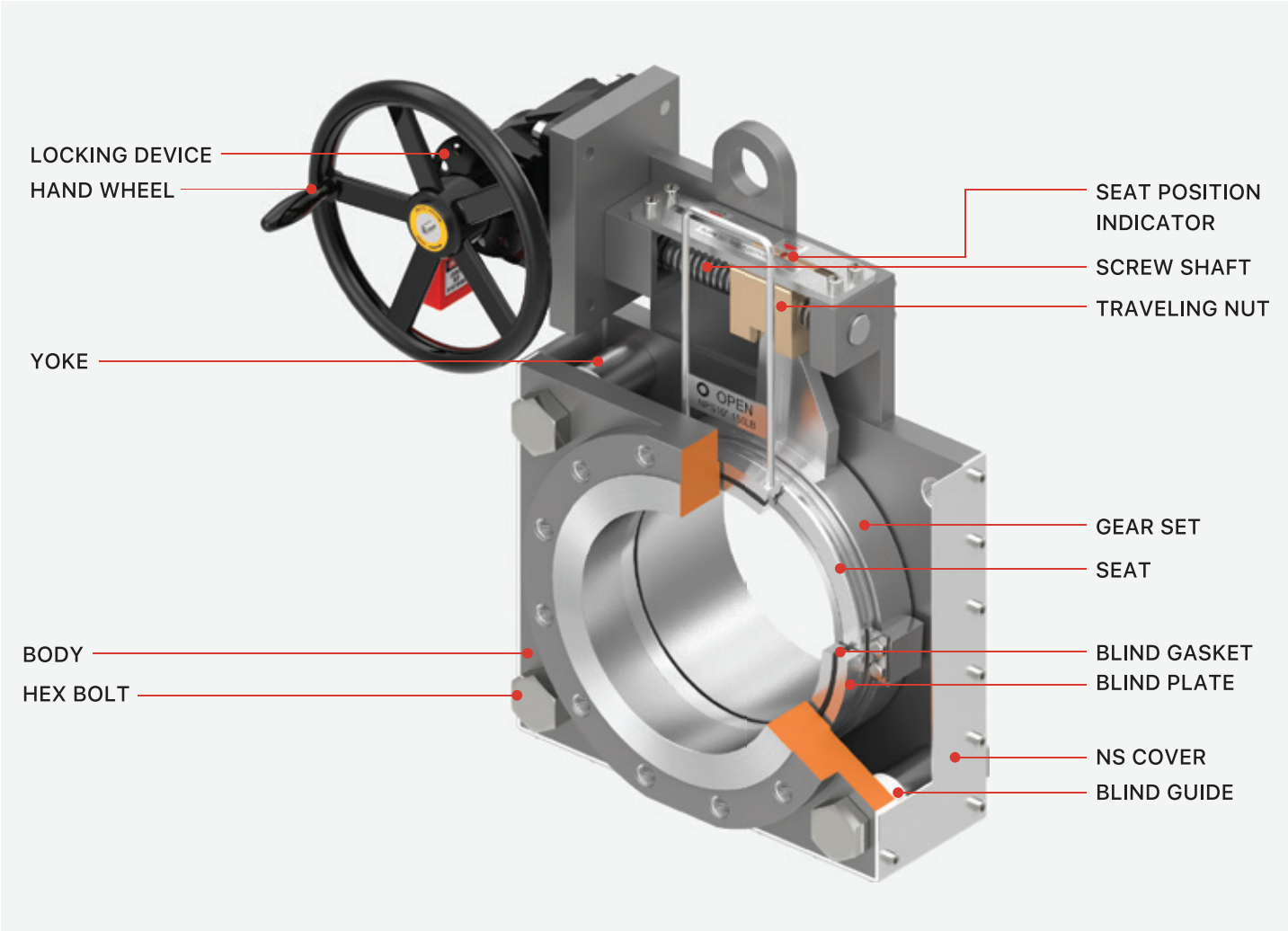

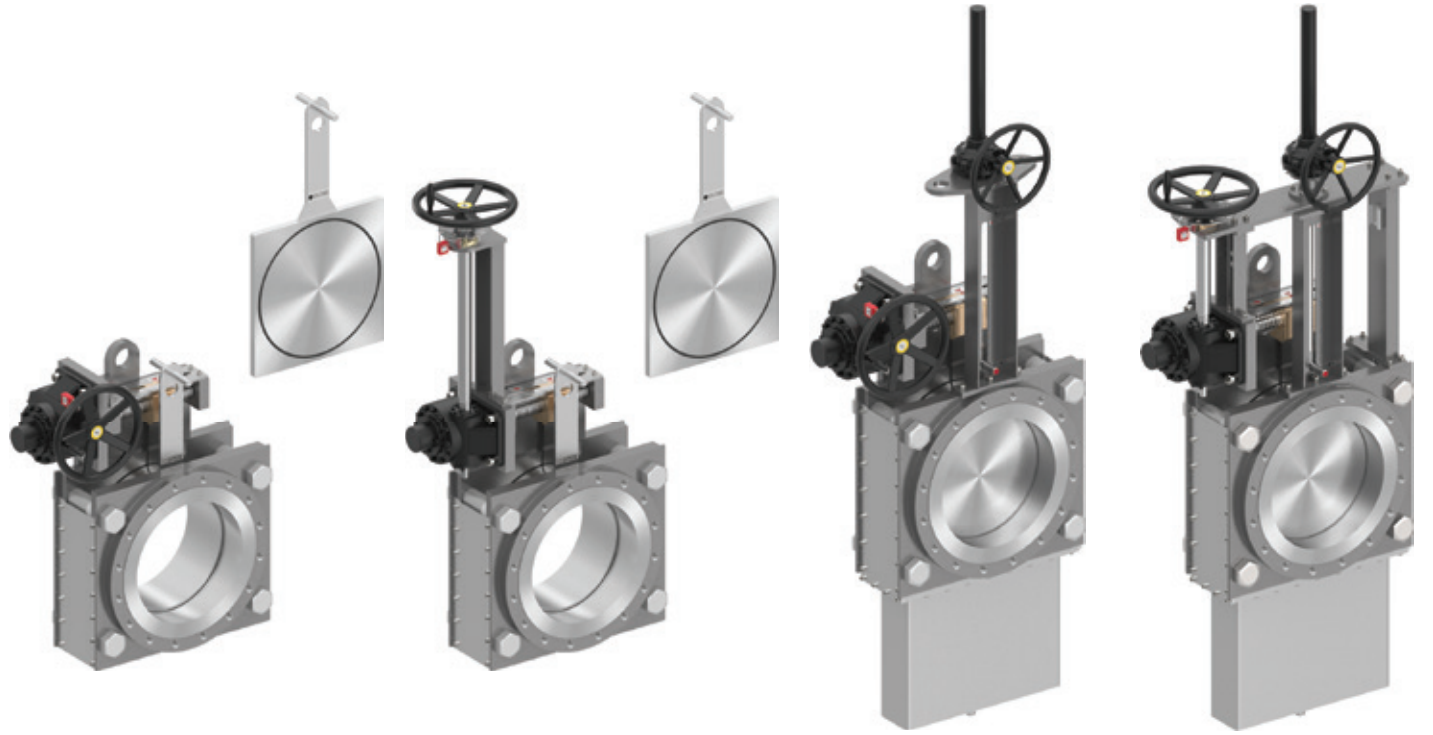

Type A | Type B | Type C | Type D

JACK BOLT TYPE

GENERAL INFORMATION

INSTRUCTION & FEATURES

The traditional style of line blind offers a board range of pressures and a lower cost.
The basic standard for line blinding for many years.
After turning 3~7 jack bolts around the body to make gap by round bar or wrench and then change the blind plate position.
Pipeline needs to be spread for operation.

TECHNICAL SPECIFICATIONS

NOMINAL DIAMETER

NPS 1/2 (DN15) - NPS100 (DN2500)

TEMPERATURE RANGE

Standard Design : -20℃ ~ +200℃
High Temp. Design : +200℃ ~ +816℃
Cryogenic Design : -196℃

PRESSURE RATING

ASME Class 150 to Class 1500
Other pressure classes up to ASME 2500
available upon request

MATERIALS

BODY : Carbon Steel, Stainless Steel, Special Material (Duplex, Hastelloy, Monel, Inconel etc.)
BLIND : Stainless Steel, Special Material (Duplex, Hastelloy, Monel, Inconel etc.)
MOVING PARTS & SEALING SURFACE are Anti-corrosion Materials

FUNCTION

Gas & Liquid Perfect Isolation(Zero Leakage)

OPERATION METHOD

Manual Operation
Electric, Pneumatic or Hydraulic Operation

APPLICATIONS

• REFINERY
> Ethylene Furnace
> Decoking line
> Steam & Vapor line
> FCCU Fractionator isolation (overhead & bottom line)
> Catalyst service
> Flare gas line

• CHEMICAL PLANT
> Reactor Blowdown
> Ethylene Furnace
> Chemical Cleaning isolation
> Mixing lines
> Regernation gas line
> Filteration system
> Loading station

• OFFSHORE
> FPSO
> LNG ship
> Shipboard lines
> Vessel inlet
> Inert Gas system

• STEEL
> Coke Oven Gas
> Blast Furnace Gas

• POWER PLANT
> Coke Oven Gas

PARTS DESCRIPTION

Jackbolt Type

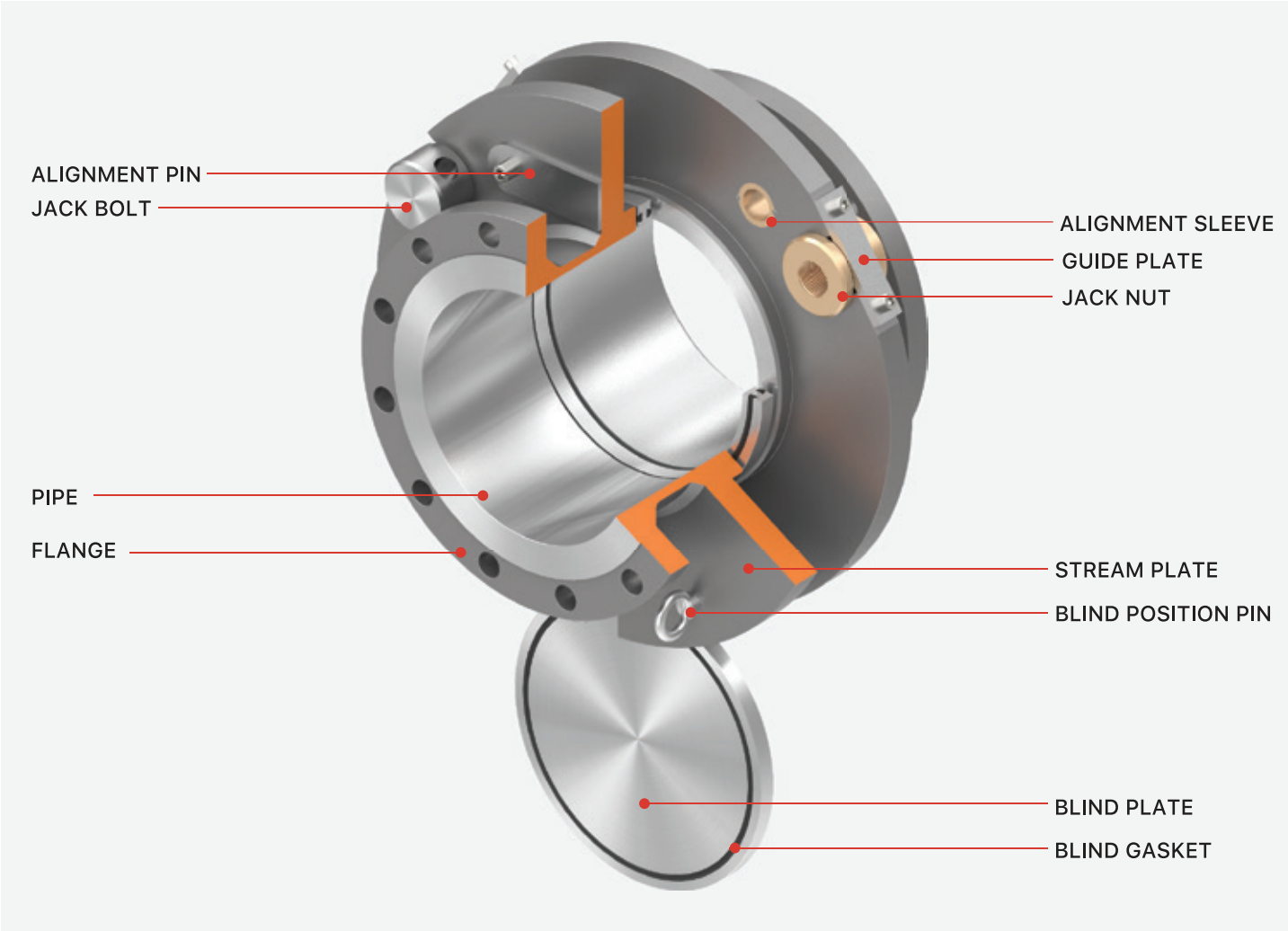

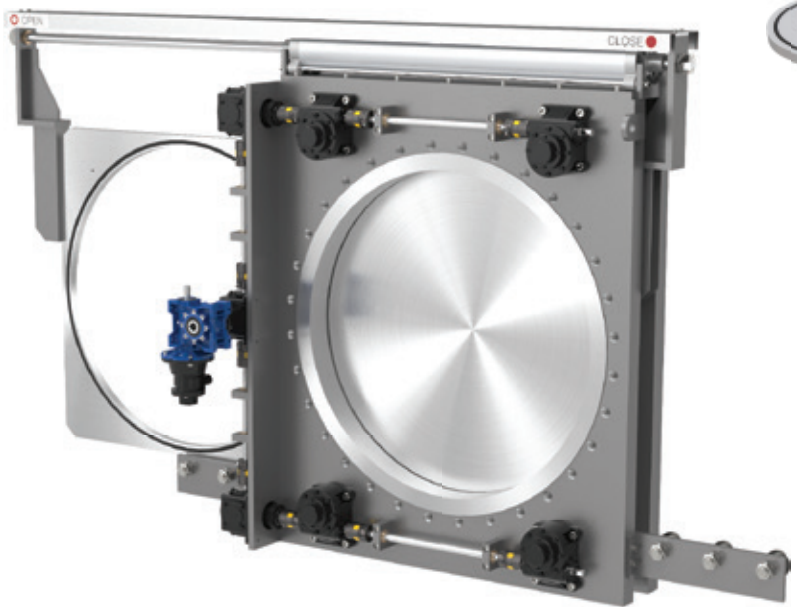

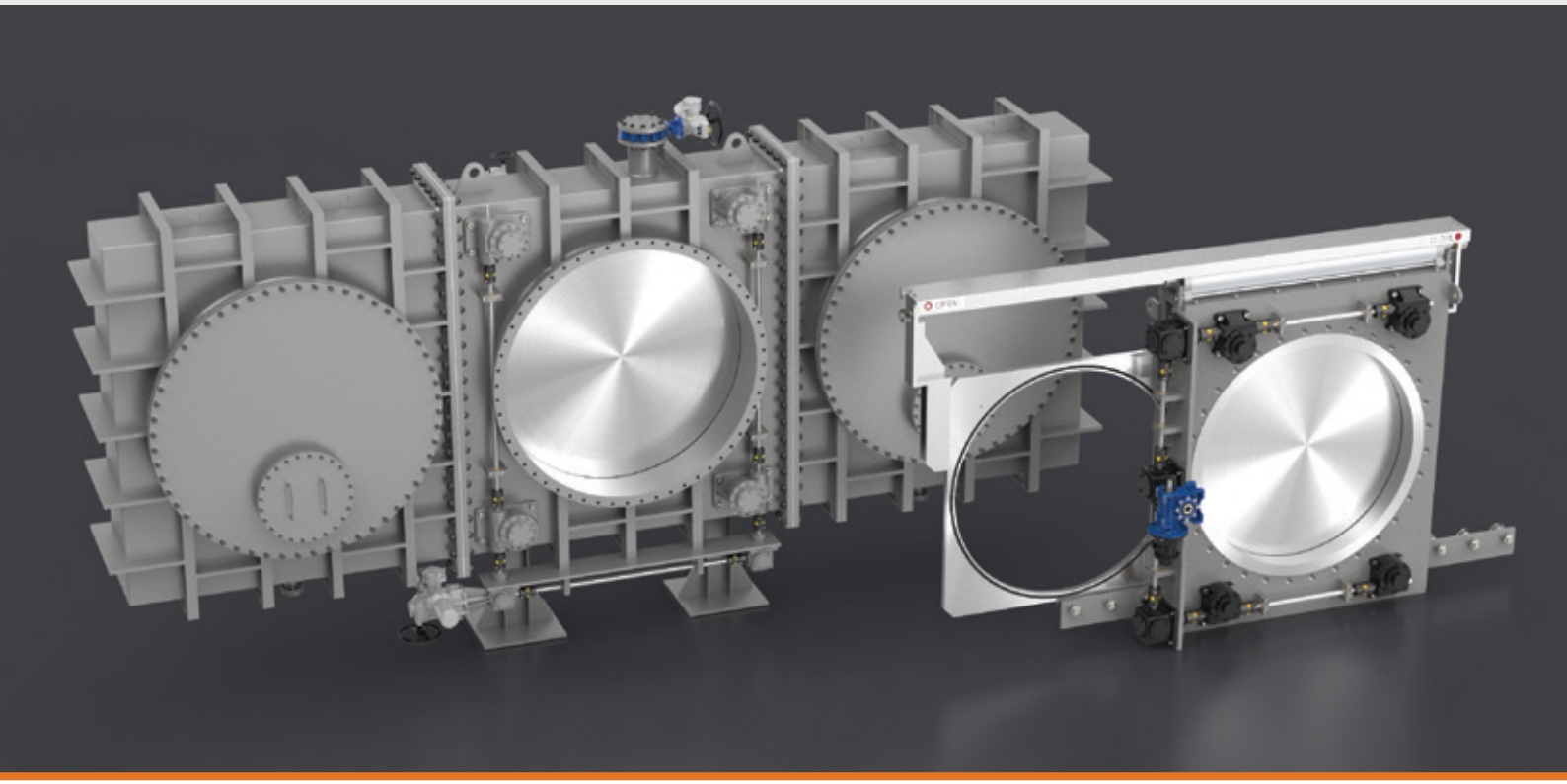

GOGGLE TYPE

GENERAL INFORMATION

INSTRUCTION & FEATURES

Goggle type of Line Blind is positive solution for large diameter, high temperature and toxic gas condition for maintenance and inspection

TECHNICAL SPECIFICATIONS

NOMINAL DIAMETER

NPS 24 (DN600) - NPS100 (DN2500)

TEMPERATURE RANGE

Standard Design : -20℃ ~ +200℃
High Temp. Design : +200℃ ~ +816℃
Cryogenic Design : -196℃

PRESSURE RATING

ASME Class 150 to Class 1500

MATERIALS

BODY : Carbon Steel, Stainless Steel, Special Material (Duplex, Hastelloy, Monel, Inconel etc.)
BLIND : Stainless Steel, Special Material (Duplex, Hastelloy, Monel, Inconel etc.)
MOVING PARTS & SEALING SURFACE are Anti-corrosion Materials

FUNCTION

Gas & Liquid Perfect Isolation(Zero Leakage)

OPERATION METHOD

Manual Operation
Electric, Pneumatic or Hydraulic Operation

APPLICATIONS

- **STEEL**
  - > Coke Oven Gas
  - > Blast Furnace Gas
- **REFINERY**
  - > Flare gas line
  - > LPG
- **CHEMICAL PLANT**
  - > Chemical Cleaning isolation
  - > Filtration system
  - > Transfer line

AUTOMATED LINE BLIND

GENERAL INFORMATION

INSTRUCTION & FEATURES

Automated Line Blind Valves are used for remote control operation, freguence cycle, or critical fluid application
Sammi provides automated system by AOV, MOV or oil hydraulic source.

TECHNICAL SPECIFICATIONS

NOMINAL DIAMETER

NPS 1/2 (DN15) - NPS100 (DN2500)

TEMPERATURE RANGE

Standard Design : -20℃ ~ +200℃
High Temp. Design : +200℃ ~ +816℃
Cryogenic Design : -196℃

PRESSURE RATING

ASME Class 150 to Class 1500
Other pressure classes up to ASME 2500
available upon request

MATERIALS

BODY : Carbon Steel, Stainless Steel, Special Material (Duplex, Hastelloy, Monel, Inconel etc.)
BLIND : Stainless Steel, Special Material (Duplex, Hastelloy, Monel, Inconel etc.)
MOVING PARTS & SEALING SURFACE are Anti-corrosion Materials

FUNCTION

Gas & Liquid Perfect Isolation(Zero Leakage)

APPLICATIONS

• REFINERY
> Ethylene Furnace
> Decoking line
> Steam & Vapor line
> FCCU Fractionator isolation (overhead & bottom line)
> Catalyst service
> Flare gas line

• CHEMICAL PLANT
> Reactor Blowdown
> Chemical Cleaning isolation
> Mixing lines
> Regernation gas line
> Filtration system
> Loading station
> Transfer line

• OFFSHORE
> FPSO
> LNG ship
> Shipboard lines
> Vessel inlet
> Inert Gas system

• STEEL
> Coke Oven Gas
> Blast Furnace Gas

• POWER PLANT
> Coke Oven Gas

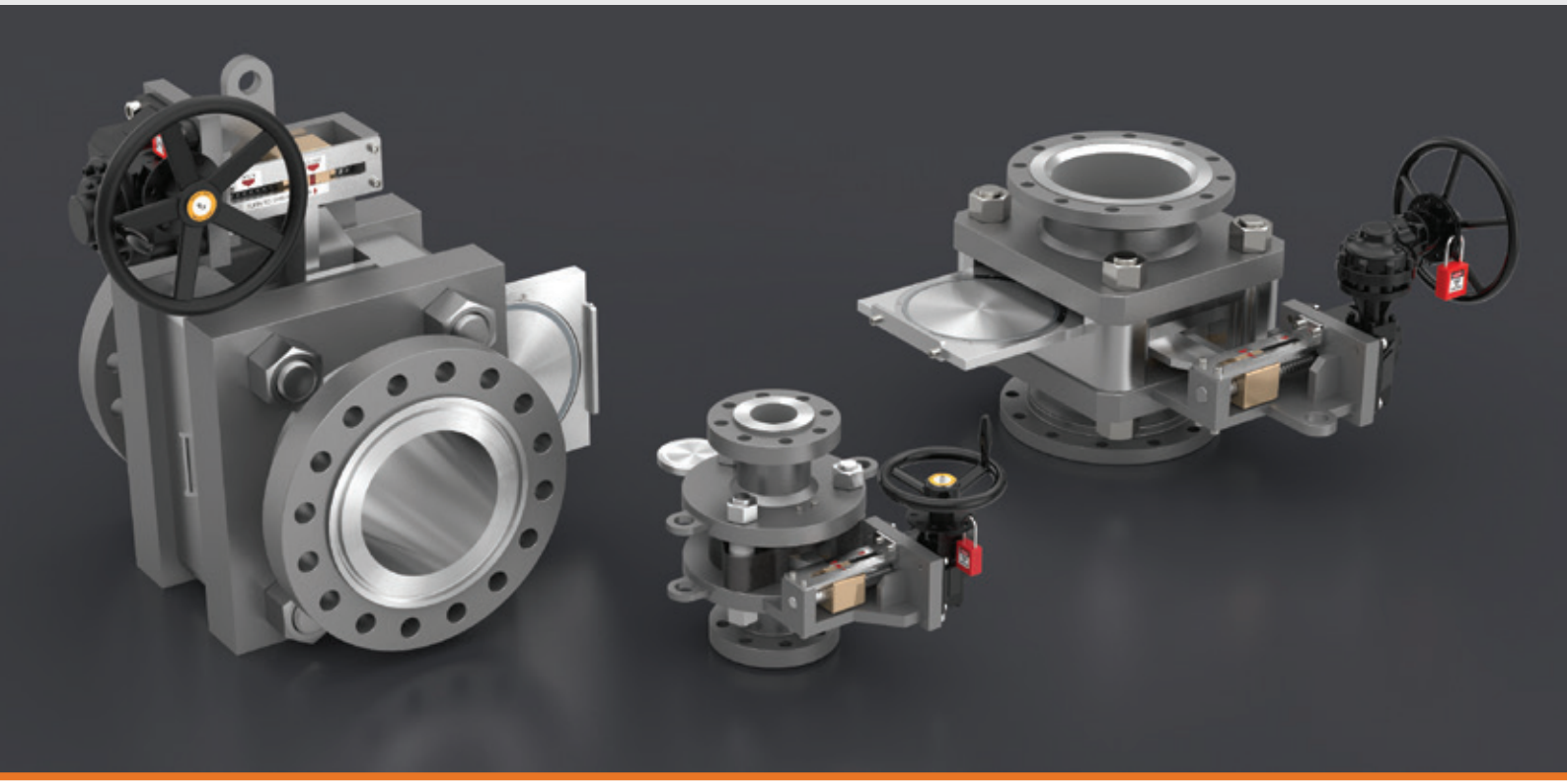

SLURRY / POLYMER

GENERAL INFORMATION

INSTRUCTION & FEATURES

Sammi Slurry / Polymer type offers 100% isolation for severe service applications with various types of chemicals that is very thick and viscous fluids and solid.
Dual Gear-set actuators allows no friction during operation and soft seal (Elastomer o-ring) guarantees perfect isolation.
Specially designed scraper system removes fluids built on blind plate.

TECHNICAL SPECIFICATIONS

NOMINAL DIAMETER

NPS 1 (DN25) - NPS100 (DN2500)

TEMPERATURE RANGE

Standard Design : -20℃ ~ +200℃
High Temp. Design : +200℃ ~ +816℃
Cryogenic Design : -196℃

PRESSURE RATING

ASME Class 150 to Class 1500

MATERIALS

BODY : Carbon Steel, Stainless Steel, Special Material (Duplex, Hastelloy, Monel, Inconel etc.)
BLIND : Stainless Steel, Special Material (Duplex, Hastelloy, Monel, Inconel etc.)
MOVING PARTS & SEALING SURFACE are Anti-corrosion Materials

FUNCTION

Gas & Liquid Perfect Isolation(Zero Leakage)

OPERATION METHOD

Manual Operation
Electric, Pneumatic or Hydraulic Operation

APPLICATIONS

- **CHEMICAL PLANT**

> Slurry
(HDPE, LDPE, PE, PP)

- **MINING & MINERALS**

> Copper, Nikel, Iron Transportation
> Corrosive & Caustic Media

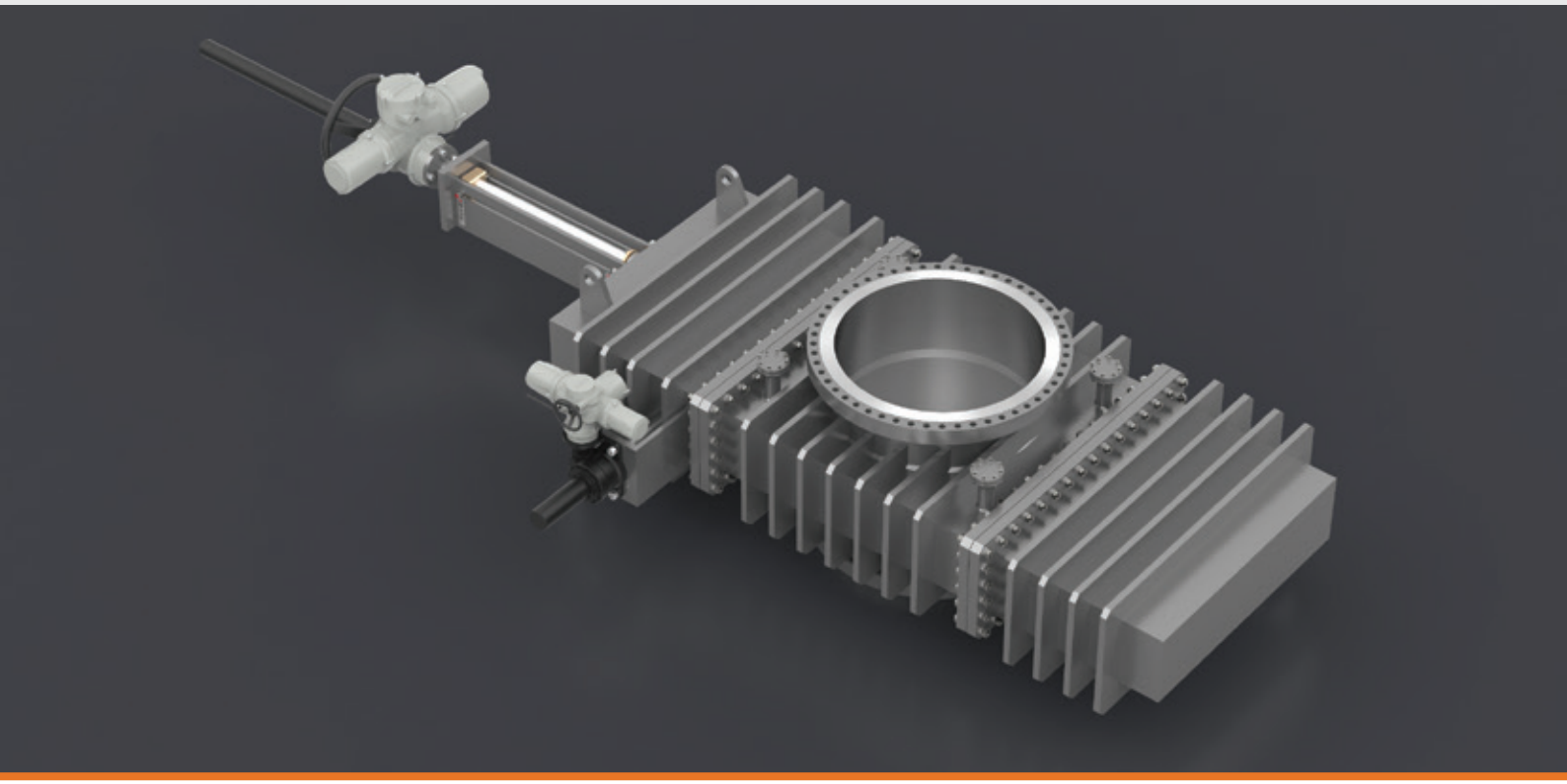

FCC / RFCC

GENERAL INFORMATION

INSTRUCTION & FEATURES

Sammi supplies high quality "Perfect isolation RFCC Type "design with compact enclosed body and stellite metal seating.
Gear-set system provides making a gap and single blind plate slides along guide plates that prevents deposition of coke/solid particles on blind disc and jamming.

TECHNICAL SPECIFICATIONS

NOMINAL DIAMETER

NPS 20 (DN500) - NPS100 (DN2500)

TEMPERATURE RANGE

Standard Design : +200℃ ~ +816℃

PRESSURE RATING

ASME Class 150 to Class 1500

MATERIALS

BODY : Carbon Steel, Stainless Steel, Special Material (Duplex, Hastelloy, Monel, Inconel etc.)
BLIND : Stainless Steel, Special Material (Duplex, Hastelloy, Monel, Inconel etc.)
MOVING PARTS & SEALING SURFACE are Anti-corrosion Materials

FUNCTION

Gas & Liquid Perfect Isolation(Zero Leakage)

OPERATION METHOD

Manual Operation
Electric, Pneumatic or Hydraulic Operation

APPLICATIONS

- **REFINERY**

> FCCU Fractionator isolation
(overhead & bottom line)

> Catalyst service

Product Selection Guide

Customer requirement

Pipe Line Checking
- ☑ Pipe size and end connection
- ☑ Max. working pressure
- ☑ Max. working temperature
- ☑ Dimensions for installation and operation
- ☑ Counter pipe schedule (butt-welding)

Material Checking
- ☑ Body & trim material
- ☑ Sealing gasket material
- ☑ Fluid / media information
- ☐ NACE

Type Selection
- ☐ Sliding Type (SL)
- ☐ Swing Type(SW)
- ☐ Compact Sliding Type (CL)
- ☐ Non-spill Type(NS)
- ☐ Jack bolt Type(EW)

Other Requirement
- ☐ Face to face dimension
- ☐ Drain / Bleeder
- ☐ Sensors
- ☐ Fire safety
- ☐ Automation AOV / MOV
- ☐ Lifting System
- ☐ Other special requirements

Custom SAMMI LINE BLIND

Product Code

SL 8 – AN300 – CS / 304 / FKM

ⓐ ⓑ ⓒ ⓓ ⓔ ⓕ

Sealing Material
NBR / HNBR : Nitrill Butadiene Rubber, Buna-N
FKM / FPM : Viton
FEPV / PFAV / PFAS : Teflon Encapsulated O-ring
VMQ / FVMQ : Silicone, Fluorosilicone
EPDM : Ethylene Propylene Rubber
FFKM / FFPM : Perfluoro Elastomer, Kalrez, Chemrez
GR : Graphite mold, Spiral wound gasket, Soft Metal

Size
ex) 8 = NPS 8
= DN200 = 200A

Type
SL : Sliding Type
SW : Swing Type
CL : Compact Type
NS : Non-Spill Type
EW : Jack Bolt Swing Type
EL : Jack Bolt Sliding Type

Class
AN300 : ASME Class 300
PN16 : DIN PIN 16
JS20 : JIS Class 20 kg/cm²

Body Material
ex) C S : Carbon Steel
304 : Stainless Steel 304
C276 : Hastelloy C276

Blind Material
ex) C S : Carbon Steel
304 : Stainless Steel 304
C276 : Hastelloy C276

Engineering

SAMMI LINE BLIND do extensive physical testing to prove designs.
Designs are performed by using developed design software and proven by finite element analysis.

ASTM Standard

·ASTM F1020 - 86 :
Standard specification for
Blind valve for Marine Application

ASME Standard

· ASME Sec.II : Materials
· ASME Sec.VIII Div. I : Rule for Construction of Pressure Vessels
· ASME Sec.IX : Qualification Standard for Wedling and Brazing Procedures
· ASME B16.5 : Pipe Flanges and Flanged Fittings
· ASME B16.34 : Standard for valves - Flanges, Threaded and Welding end
· ASME B31.1 : Power Piping
· ASME B31.3 : Process Piping

API Standard

· API Spec. Q1 : Specification for Quality program for the Petroleum and Natural Gas Industry
· API Spec. 5L : Specification for Line Pipe
· API Spec. 605 : Larger - Diameter Carbon Steel Flange
· API 598 : Valve Inspection and Test
· API 607 : Fire Test for Soft - Seated Quater Turn Valves.
· API 590 : Steel Line Blanks

MSS Standard

· SP - 6 : Finish for contact faces of pipe flanges and connecting end flanges of valves and fittings
· SP - 25 : Marking system for valves. fitting, flanges and unions.
· SP - 55 : Quality standard for steel castings for valves. flanges and fitting and other piping components (visual method)

Pressure Test (ASTM F1020, API 598)

Class	Seat & Shell
150	23kg/㎠ (325psi)
300	58kg/㎠ (825psi)
600	116kg/㎠ (1,650psi)
900	172kg/㎠ (2,450psi)
1500	288kg/㎠ (4,100psi)

F.E Analysis

Sliding type, NPS 28, ASME 900 lbs, Stainless Steel 304 valve, part coupled thermal - structural F.E Analysis (ANSYS 17.2)

Coupled Analysis

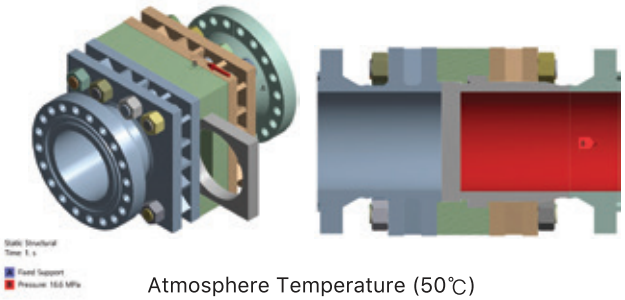

Atmosphere Temperature (50℃)

Stress Distribution

Overall stress distribution is the same as each other (inside pressure 166bar)

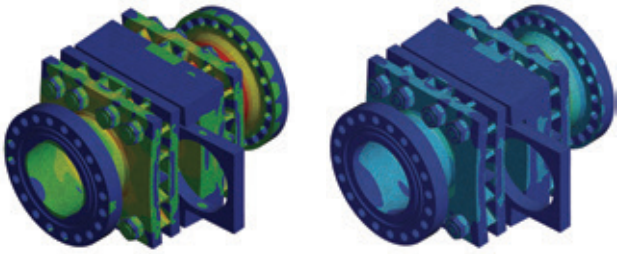

[Total Deformation] [Equivalent Stress]

MANUFACTURING & CERTIFICATE

Leakage trouble with general valves may cause big losses of industrial management as contamination of fluid mixing, personnel accident by inhalation of toxic gases or unexpected explosion that leads to occasionally huge disaster.
SAMMI quick blinding products give the best solution for safety management of pipelines.

Fire Safety Test (API 607)

Fire Safety Test

Cryogenic Test (-196℃)

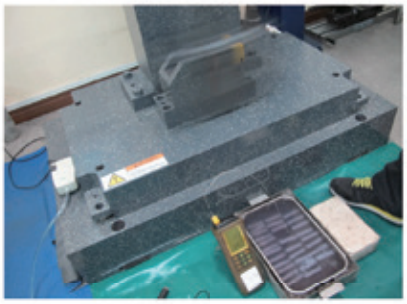
Impact Test (ASTM A370-12)

Xylan Coating

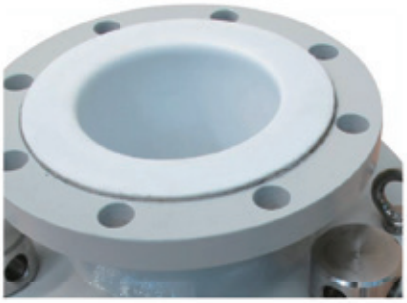
PTFE Lining

Metal Spray

Weld Bulit up

Weld Bulit up (ASME Sec. IX)

Pressure Test (API 598)

Class 5500 Pressure test

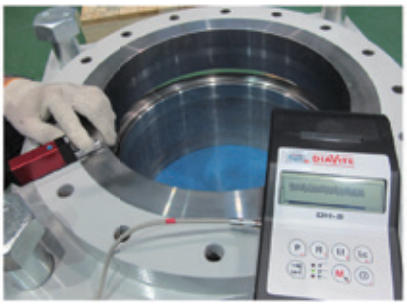
Surface Roughness Inspection
(ASME Sec. V Art.5)

Material

Carbon Steel, Stainless Steel, Duplex, Hastelloy, Alloys and other special materials are available

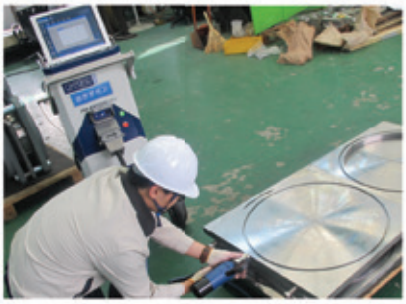

PMI (ASME Sec. II Part A,B,C)

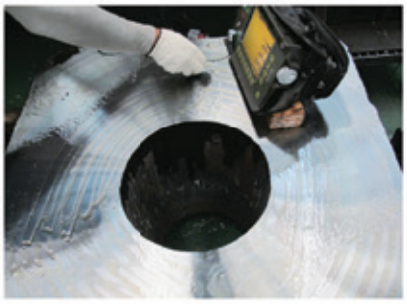

NDE (UT)

Bend Test (ASTM E190)

Tensile Test

Dry Flim Thickness Inspection (ISO 19840)

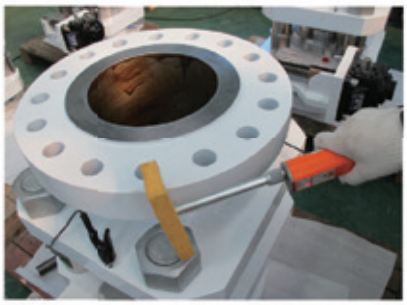

Holiday detection (NACE RP 0188)

CE-PED Module H.

- Pressure Equipment
- Approved from Bureau Veritas

ISO 9001

- Quality Management System
- Approved from Bureau Veritas

Fire Safety Test

- Fire Safe design
- Approved from Velosi

API Spec. Q1

- Quality Management system
- Approved from API

TSSA

- Boilers & Pressure Vessels
- Approved from TSSA (full name CANADA)

ABSA

- Boilers & Pressure Vessels
- Approved from ABSA (full name CANADA)

RCU 032/2013

- On safety of equipement for high pressure
- EAEC (Eurasian Economy Community)

API 6D

- Specification for pipeline valves
- Approved from API

Dimension - Sliding Type

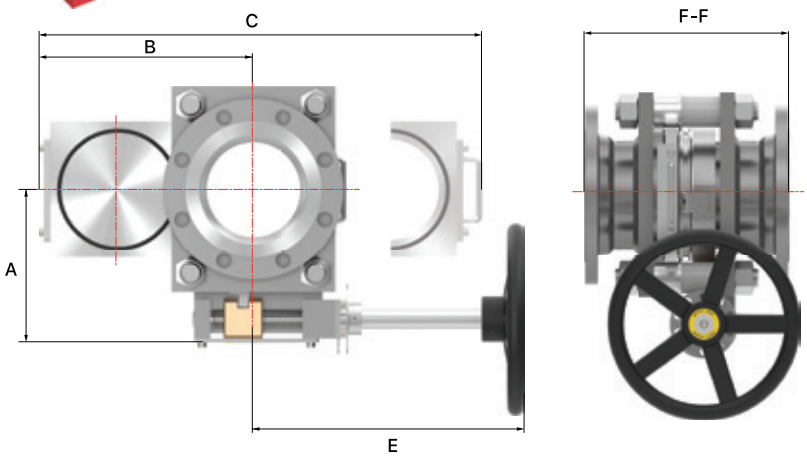

Class 150

Size		F-F	A	B	C	E	kg
inch	DN						Weight(NET)
1	25	190	99	116.5	233	174.5	10
1-1/2	40	210	115.6	142.5	285	205	16
2	50	230	134.5	166	332	234	27
2-1/2	65	240	146.5	185	370	260	30
3	80	270	168.5	211	442.4	320	35
4	100	280	187	244	508.4	340	49
6	150	320	233	333	687	427	87
8	200	360	331	415.5	859	335.5	145
10	250	380	362	525	1025.2	370	215
12	300	430	397	611	1198	380.6	312
14	350	470	483.6	685	1370	426.7	450
16	400	540	518	759.5	1519	436.5	600
18	450	560	575	856.5	1713	526.2	780
20	500	660	619	940	1880	527	900
24	600	720	750	1104	2202	659.5	1500

Class 300

Size		F-F	A	B	C	E	kg
inch	DN						Weight(NET)
1	25	200	99	116.5	233	174.5	11
1-1/2	40	240	119	142.5	285	205	18
2	50	245	134.5	166	332	234	30
2-1/2	65	270	146.5	185	370	260	36
3	80	320	177	211	442.4	300	58
4	100	360	193.5	241	502	329	62
6	150	410	255	354	687	427	130
8	200	460	341	443	858	338	210
10	250	510	402	525.5	1025	381.1	300
12	300	570	468	618.5	1205	421.3	430
14	350	650	498	691.5	1383	410.6	540
16	400	720	594	789.7	1579.5	531.5	690
18	450	730	644	885	1770	545.7	950
20	500	800	645	940	1880	533.8	1800
24	600	850	800	1120	2240	665.5	2800

*This dimension table is only for the reference and it can be changed without notification.

* F-F dimension can be changeable according to site condition.

Dimension - Swing Type

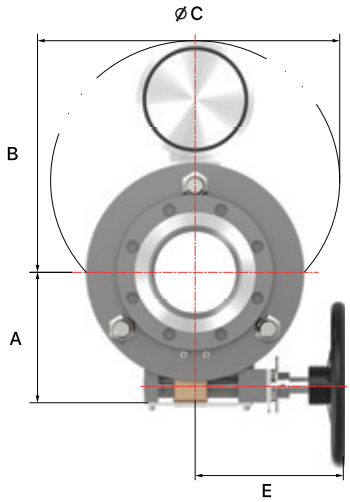

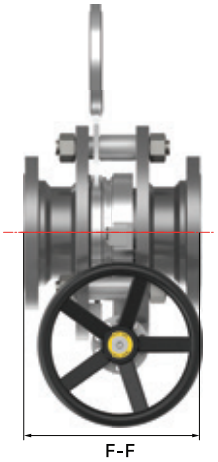

Class 150

Size		F-F	A	B	Ø C	E	kg
inch	DN						Weight(NET)
1	25	190	90	133	163	145	10
1-1/2	40	200	102	163	201	153	15
2	50	220	125.5	193.4	237.8	188	24
2-1/2	65	240	146.5	220	272	205	30
3	80	250	173	258.5	321	215	35
4	100	250	175	298.5	375	250	54
6	150	300	233	415	520	271	85
8	200	340	331	508	640	414	152
10	250	380	380	602.5	765	373.5	225
12	300	430	410	678	862.5	381	310
14	350	470	475	748.3	949	425	520
16	400	540	513	848.5	1081	435	600
18	450	580	600	925.8	1183.9	515	750
20	500	660	659	1055	1340	546.1	1500
24	600	800	770	1235	1573	664	2300

Class 300

Size		F-F	A	B	Ø C	E	kg
inch	DN						Weight(NET)
1	25	200	90	133	163	145	11
1-1/2	40	230	115.6	163.4	201.5	160	18
2	50	240	127.3	193.7	238	200	30
2-1/2	65	270	135	220.3	272.4	220	35
3	80	300	173	263.1	327.1	225	45
4	100	320	189	297	372	230	81
6	150	410	260	409	514	272	120
8	200	450	350	508	640	340	210
10	250	500	406	609.5	769	375	310
12	300	570	481	716	909.5	394	450
14	350	620	481	781.5	986	435	650
16	400	660	514.9	871.9	1104.2	458.6	950
18	450	720	600	965.1	1229.8	520	1200
20	500	780	700	1058	1350	530	1800
24	600	870	780	1235	1573	670	3000

*This dimension table is only for the reference and it can be changed without notification.

* F-F dimension can be changeable according to site condition.

Dimension - Compact Type

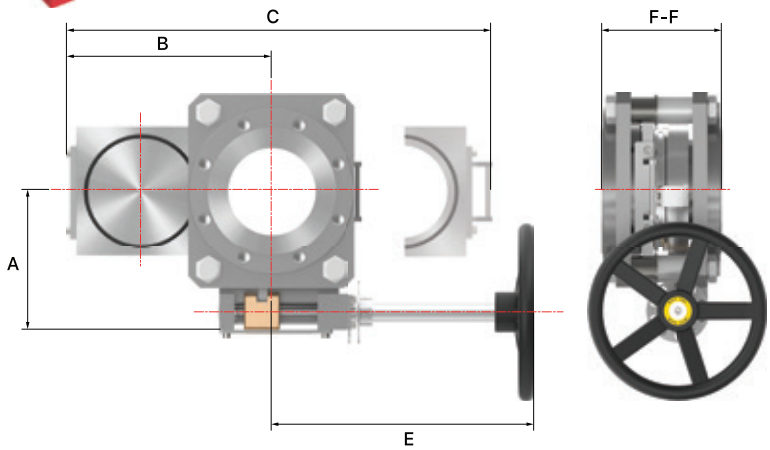

Class 150

Size		F-F	A	B	C	E	kg
inch	DN						Weight(NET)
1	25	115	106.5	125	250	177	8
2	50	130	142.5	177.5	393	276	24
3	80	160	169.5	221.5	480	325	35
4	100	170	189	262.5	525	365	47
6	150	200	233	343	711	427	85
8	200	220	331	443.5	860	335.5	125
10	250	240	387	540	1038	377	195
12	300	260	412	639.5	1279	384	310
14	350	300	454	462	1322	400	382
16	400	340	518	762	1524	436	580
18	450	360	575	855	1710	526	620
20	500	400	630	940	1880	533.8	890
24	600	420	715	1105	2220	562	1200

Class 300

Size		F-F	A	B	C	E	kg
inch	DN						Weight(NET)
1	25	125	108	125	250	177	10
2	50	140	145.5	177.5	393	266	26
3	80	170	206	247.9	520.8	337.2	40
4	100	180	245.5	262.5	563	380	60
6	150	230	255	360.5	745	455	130
8	200	250	361	467	917	360	250
10	250	280	381	536.8	1095.5	342.9	290
12	300	290	424	627.5	1230	370	400
14	350	350	498	652	1367	415	545
16	400	430	605	795.8	1591.5	531.3	815
18	450	380	644	952.5	1775	571	1012
20	500	400	645	940	1880	533.8	1400
24	600	500	800	1120	2240	665.5	2000

*This dimension table is only for the reference and it can be changed without notification.

* F-F dimension can be changeable according to site condition.

Dimension - Non-Spill Type

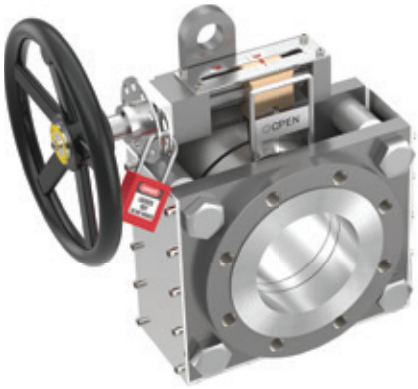

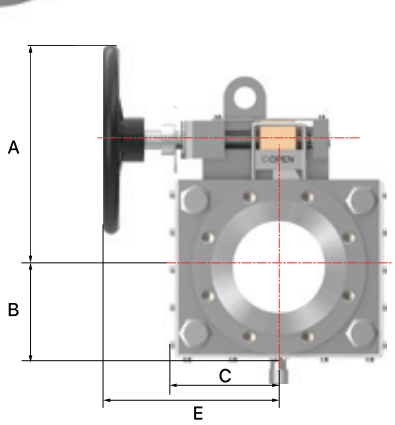

Class 150

Size		F-F	A	B	C	E	kg
inch	DN						Weight(NET)
1	25	110	175	117	75	160	10
2	50	130	235	128	101	190	25
3	80	160	275	148	121	220	35
4	100	170	276	142	130	217	48
6	150	200	350	173	173	325	85
8	200	220	463	205	204	329	130
10	250	240	500	238	238	356.2	250
12	300	260	543	275	277	435.5	350
14	350	300	612	303	280	458	410
16	400	340	691	338	330	452.8	650
18	450	360	768	357	350	559	750
20	500	400	885	422	410	640	950
24	600	420	990	492	472.5	693	1500

Class 300

Size		F-F	A	B	C	E	kg
inch	DN						Weight(NET)
1	25	125	167.5	93	101.5	217	10
2	50	140	224.5	120	125.5	263.5	30
3	80	170	277	129.5	157.5	304	45
4	100	180	324	185	146	240	63
6	150	230	375	209	183	260	180
8	200	250	415.5	239	218	345.5	260
10	250	280	526	271.5	255.5	389	295
12	300	290	579	300	300	450	410
14	350	350	623	331.5	332	462	650
16	400	360	640	370	374	500.5	820
18	450	380	805	412	395	604	1020
20	500	400	856	443	447	635	1500
24	600	500	937	512	493	692	2200

*This dimension table is only for the reference and it can be changed without notification.

* F-F dimension can be changeable according to site condition.

Sammi knows positive pipeline isolation

First in the world, SAMMI developed various kinds of innovative Non-line spreading type LINE BLIND. SAMMI provides high quality products with the most advanced design and technology fulfill actual site conditions and fluids

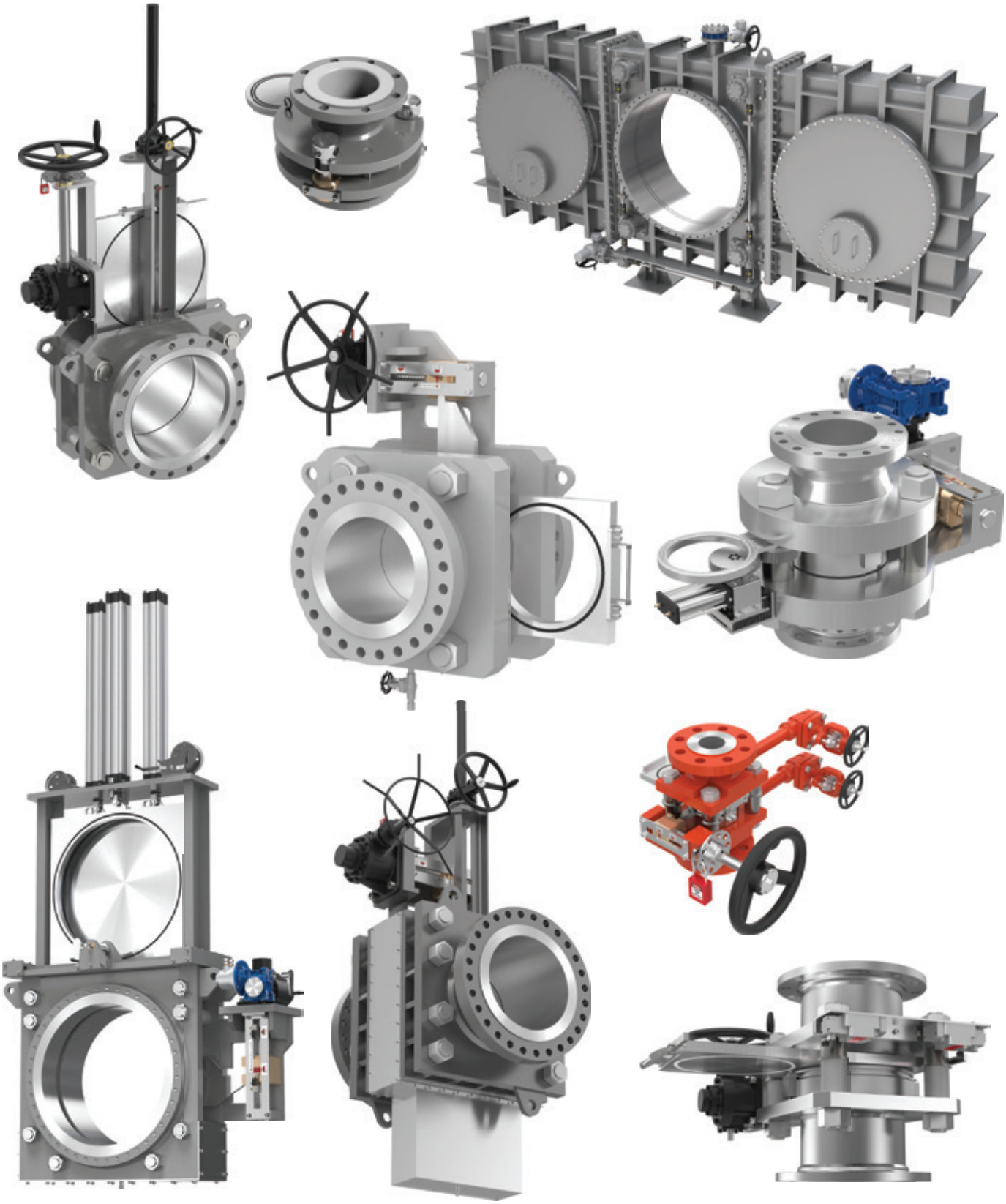

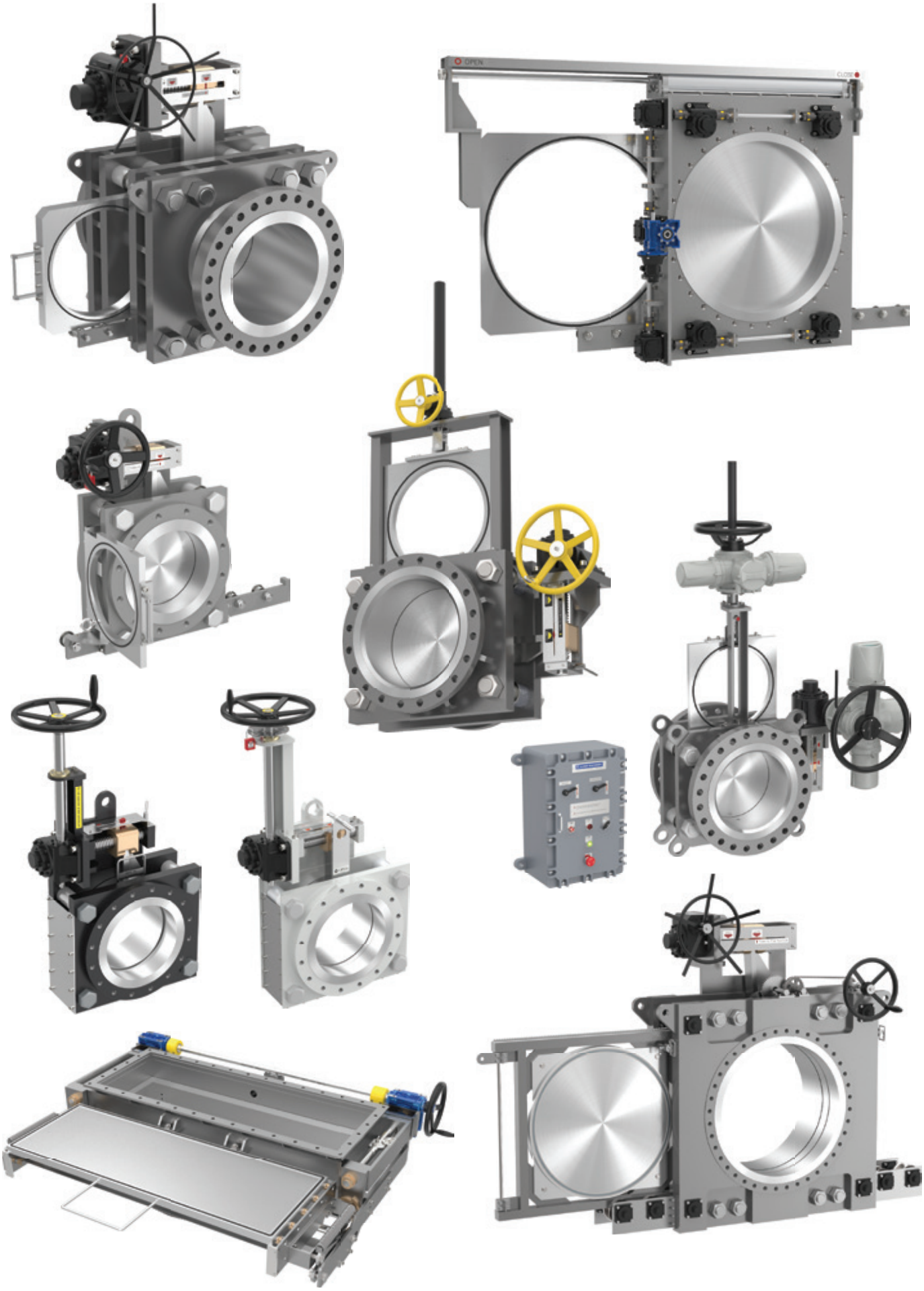
OPEN
CLOSE

The best solution for positive isolation

Address : 32, Iyeon-gill Sangnam-myeon,
Miryang-si, Kyeongnam S.KOREA (50449)
Tel : (+82)55.354.7504
Fax : (+82)55.354.7533
E-mail : sm@sammiw.com
Web : www.sammiw.com

Pegler+Louden
INDUSTRIAL VALVES SPECIALISTS
0844 8007721 sales@peglerandlouden.com
www.peglerandlouden.com
SUPPORTED BY
BSS

Copyright 2018. SAMMI Machinery Co., Ltd.